THIS DRAWING IS UNPUBLISHED. RELEASED FOR PUBLICATION -,- .
© COPYRIGHT - By - ALL RIGHTS RESERVED.

LOC	DIST
AD	25

REVISIONS

P	LTR	DESCRIPTION	DATE	DWN	APVD
	B	REVISED PER ECO-13-006338	22APR13	KH	RP

△1 HOUSING MATERIAL: GLASS-FILLED POLYMER.

△2 CONTACT MATERIAL: COPPER ALLOY.

△3 CONTACT FINISH: DIN 41612 CLASS 2 IN CONTACT AREA. TIN PLATE ON POSTS.

△4 PART NUMBER, DATE CODE IDENTIFICATION, CSA LOGO IN THIS APPROXIMATE AREA, ON REVERSE SIDE.

△5 CONTACT POINT.

△6 RECOMMENDED HOLE SIZE FOR MANUAL APPLICATION OF CONNECTOR ONTO PC BOARD.

△7 CONTACT FINISH: 0.000076 [.000003] MIN GOLD IN CONTACT AREA. 0.00127 [.000050] NICKEL UNDERPLATE ALL OVER. TIN ON POSTS. CONTACT AREA LUBRICATED WITH BELLCORE APPROVED LUBRICANT, TECHNICAL REFERENCE GR-1217-CORE, ISSUE 1, NOVEMBER 1995.

△8 HOUSING MATERIAL: HIGH TEMP GLASS-FILLED POLYMER.

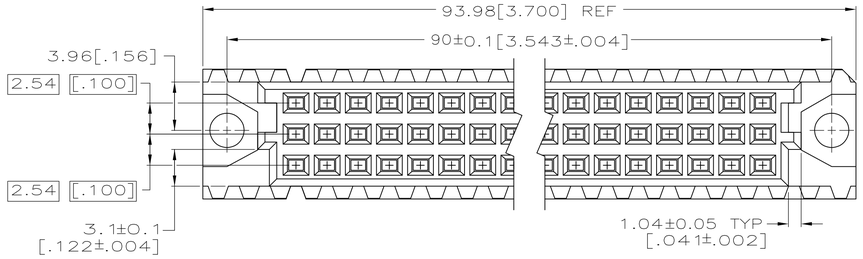

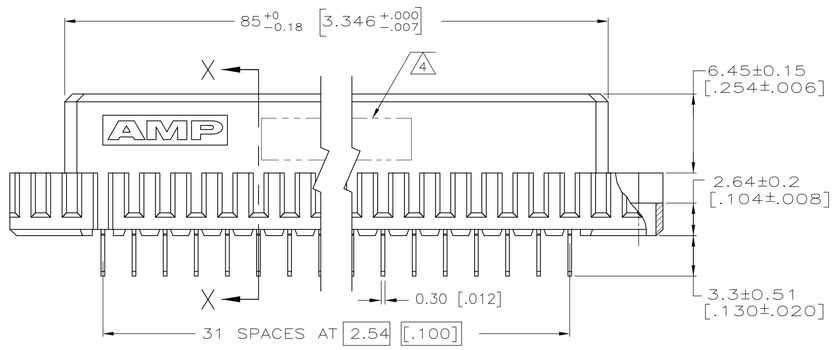

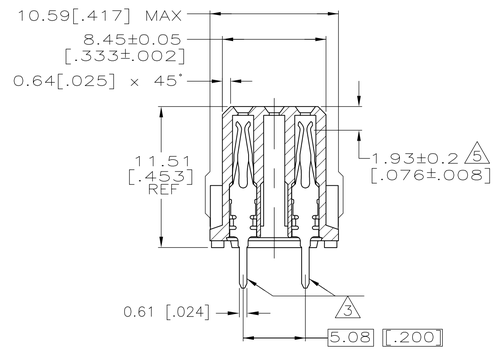

SECTION X-X

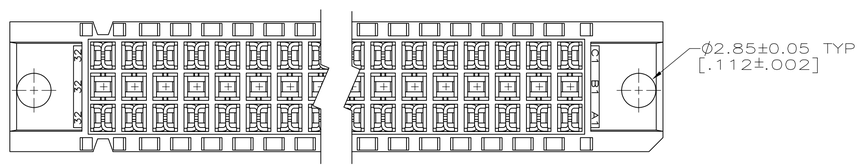

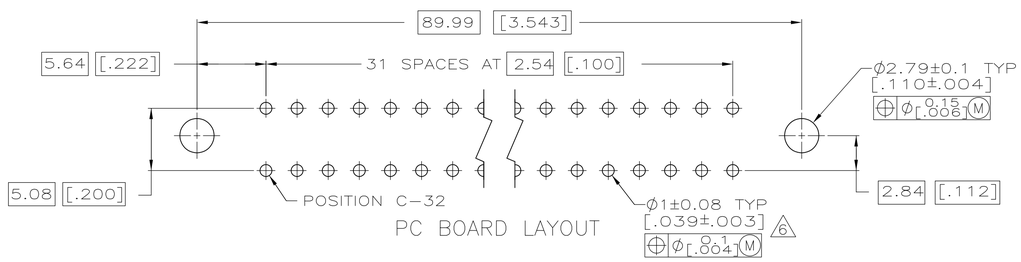

PC BOARD LAYOUT

△1 △2	△3	1-32	C	32	5650956-5
		NONE	B	0	
		1-32	A	32	
△8 △2	△3	1-32	C	32	5650956-8
		NONE	B	0	
		1-32	A	32	
△1 △2	△7	1-32	C	32	5650956-3
		NONE	B	0	
		1-32	A	32	
MATERIAL	FINISH	POSITIONS LOADED	ROWS	NO. OF LOADED POSITIONS	PART NUMBER

THIS DRAWING IS A CONTROLLED DOCUMENT.

DIMENSIONS: mm [INCHES]

TOLERANCES UNLESS OTHERWISE SPECIFIED:
0 PLC ± –
1 PLC ± –
2 PLC ± –
3 PLC ± 0.13[.005]
4 PLC ± –
ANGLES ± –

MATERIAL: SEE TABLE
FINISH: SEE TABLE

DWN J. POLIGNONE 03JUN05
CHK A. SHARPE 03JUN05
APVD A. SHARPE 03JUN05
PRODUCT SPEC —
APPLICATION SPEC —
WEIGHT —

TE Connectivity

NAME: ASSEMBLY, RECEPTACLE, EUROCARD, TYPE C, LEAD-FREE, A and C, 64/96 POSITION, 3.30[.130] SOLDER POSTS

SIZE	CAGE CODE	DRAWING NO	RESTRICTED TO
A1	00779	C-5650956	—

CUSTOMER DRAWING | SCALE 4:1 | SHEET 1 OF 1 | REV B