THIS DRAWING IS UNPUBLISHED. RELEASED FOR PUBLICATION 20
© COPYRIGHT 20 BY - ALL RIGHTS RESERVED.

REVISIONS

P	LTR	DESCRIPTION	DATE	DWN	APVD
	A	RELEASE	05JUL2016	AL	SZ
	A1	ADD NOTES	19JUL2017	AL	SZ

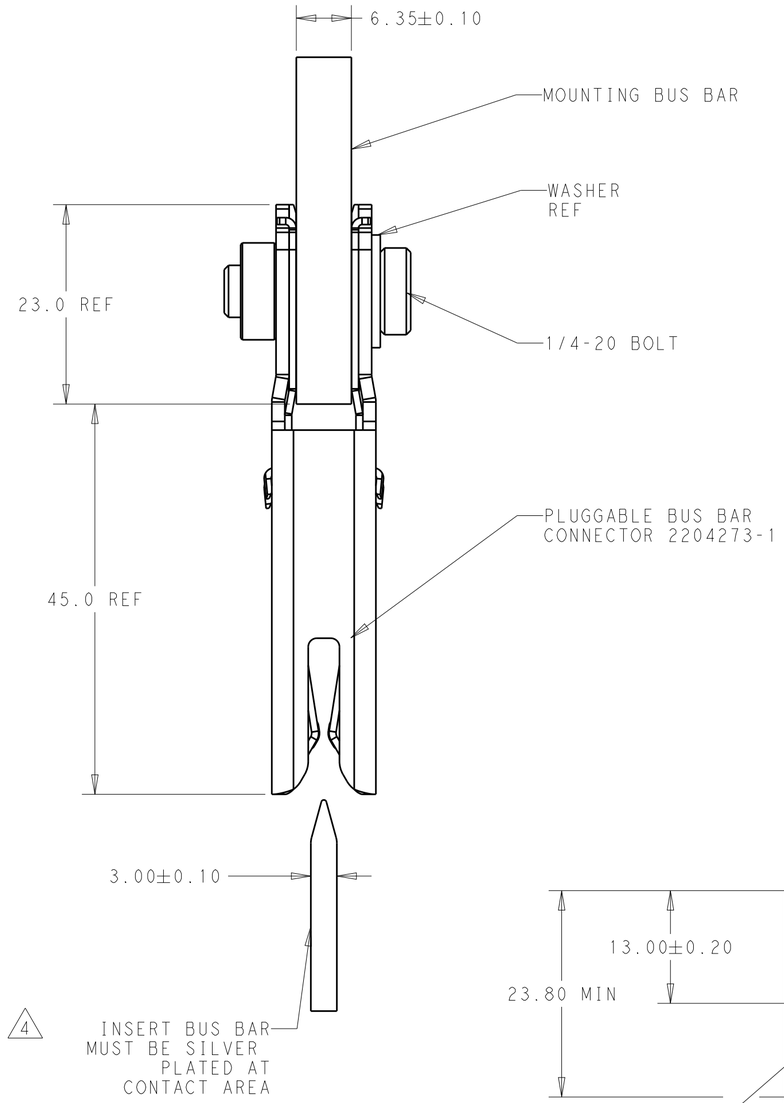

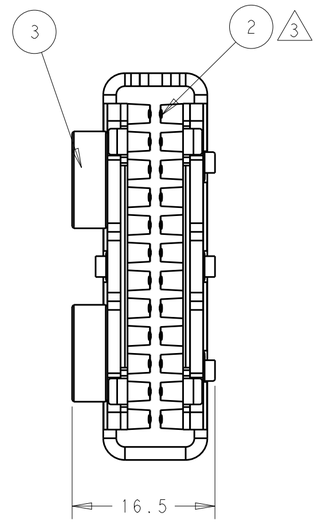

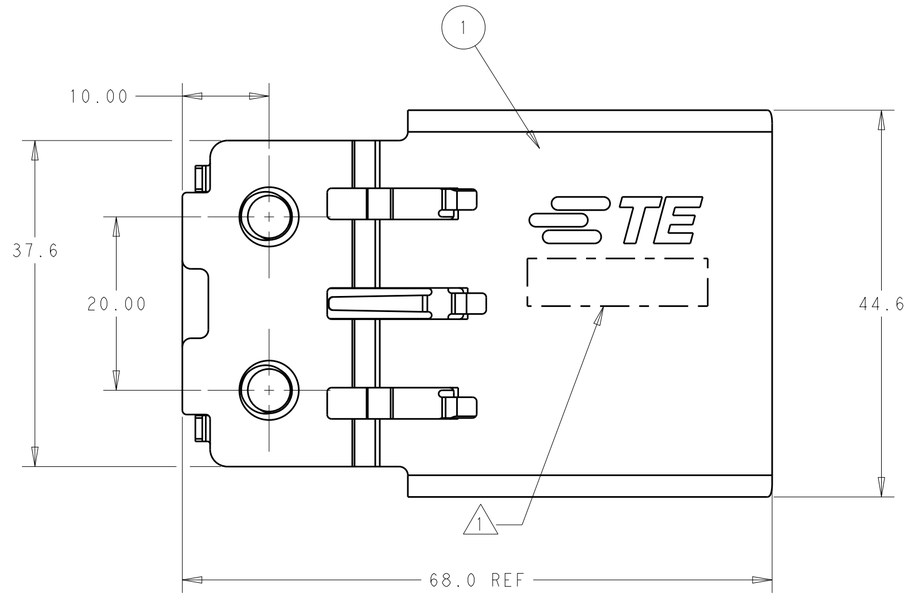

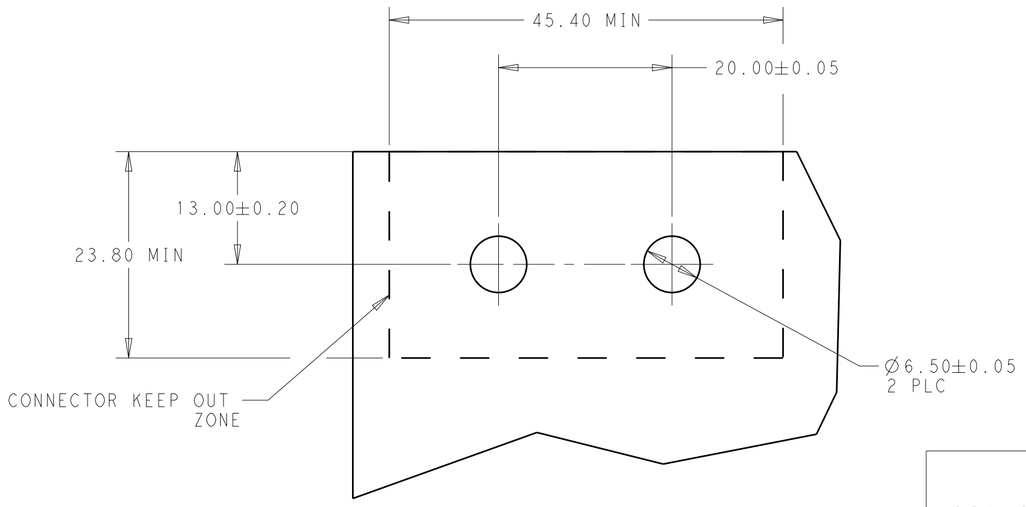

RECOMMENDED MOUNTING BUS BAR LAYOUT

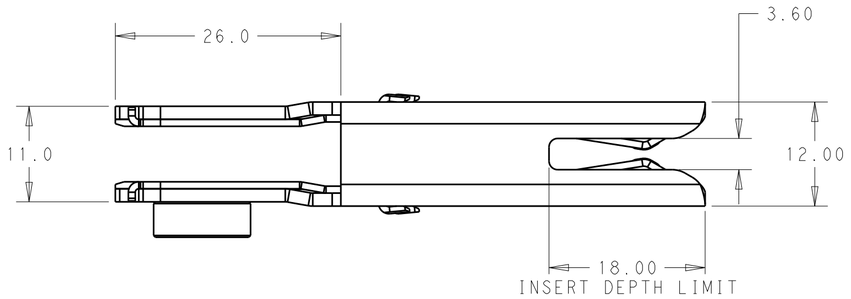

PART NUMBER	ITEMS	DESCRIPTION	MATERIAL	Q'TY	FINISH
2204273-1 (2)	3	CLINCHING NUT 1/4-20 THREAD	STAINLESS STEEL	2	-
	2	CONTACT	COPPER ALLOY	2	SILVER
	1	OUTER HOUSING	STAINLESS STEEL	1	-

NOTES:

1. PART NUMBER AND DATACODE TO BE MARKED IN AREA SHOWN
2. MATERIAL: SHOWN IN BOM LIST
3. CONTACT PLATING: SILVER PLATING ON CONTACT FUNCTIONAL AREA
4. BUS BAR MUST BE SILVER PLATING ON CONTACT AREA

THIS DRAWING IS A CONTROLLED DOCUMENT.

DIMENSIONS: mm

TOLERANCES UNLESS OTHERWISE SPECIFIED:
0 PLC ±-
1 PLC ±0.2
2 PLC ±0.15
3 PLC ±0.05
4 PLC ±0.0001
ANGLES ±1

MATERIAL -
FINISH -

DWN ANDY LI 17JUN2014
CHK SUNY ZHAO 17JUN2014
APVD SUNY ZHAO 17JUN2014
PRODUCT SPEC 108-128012
APPLICATION SPEC 114-2111
WEIGHT 97.28

TE Connectivity

NAME PLUGGABLE BUS BAR CONNECTOR IN-LINE MOUNTING

SIZE A2 | CAGE CODE - | DRAWING NO C-2204273 | RESTRICTED TO -

CUSTOMER DRAWING | SCALE 1:1 | SHEET 1 OF 1 | REV A1

1471-9 (3/13)