Low Voltage Differential Signaling (LVDS) Evaluation Module (EVM) for Quad Drivers and Receivers

User's Guide

Literature Number: SLLU016C
August 2000–Revised February 2010

Copyright © 2000–2010, Texas Instruments Incorporated

Contents

1 Introduction 5
2 Equipment Required 9
3 Point-to-Point Transmission 13
4 Multidrop Transmission 15
5 Evaluation of Receiver Operation During Ground Shifts 17
6 The Application of TIA/EIA-422 Data to an LVDS Receiver 19
7 References 21

Copyright © 2000–2010, Texas Instruments Incorporated

List of Figures

1-1. SN65LVDS31/32B EVM Printed-Circuit Board 6
2-1. EVM Schematic Diagram 10
3-1. Point-to-Point Schematic Diagram 13
4-1. Multidrop Schematic Diagram 15
5-1. Test Setup 18
6-1. TIA/EIA-422 Data to an LVDS Receiver Schematic 19

List of Tables

1-1. EVM Selection Guide 5
1-2. Jumper Functionality 7
2-1. Parts List (SLLP101–1, SLLP101–2, SLLP101–3, and SLLP101–4) 11

Copyright © 2000–2010, Texas Instruments Incorporated

Introduction

In an effort to help system designers reduce design cycle time, TI offers a series of low-voltage differential signaling (LVDS) evaluation modules (EVMs) designed for analysis of the electrical characteristics of LVDS drivers and receivers. Four unique EVMs are available to evaluate the different classes of LVDS devices offered by TI. Flexibility has been designed into these EVMs so they can be setup in a point-to-point topology (one driver to one receiver), and a multidrop topology (one driver to various receivers). This user's guide identifies each EVM and establishes guidelines on their setup and procedures.

Table 1-1 identifies four EVMs covered by this user's guide.

Table 1-1. EVM Selection Guide

EVM NAME	EVM MARKING	DRIVER	RECEIVER	COMMENTS
SN65LVDS31–32EVM	SLLP101–1	SN65LVDS31	SN65LVDS32	Standard compliant devices
SN65LVDS31–32BEVM	SLLP101–2	SN65LVDS31	SN65LVDS32B	Wide common-mode receivers
SN65LVDM31–32BEVM	SLLP101–3	SN65LVDM31	SN65LVDS32B	Multipoint driver and wide common-mode
SN65LVDS31–33EVM	SLLP101–4	SN65LVDS31	SN65LVDS33	Enhanced wide common-mode receivers

As seen in Table 1-1, various combinations of drivers and receivers are supported by the different EVMs. Both drivers shown in Table 1 are pincompatible, as are the three receivers. The same printed-circuit board (PCB) has been used for all four EVMs, resulting in the same operating instructions included herein.

The SN65LVDS31–32EVM includes the SN65LVDS31 quad driver and SN65LVDS32 quad receiver. The SN65LVDS31 is a TIA/EIA-644 standard compliant LVDS driver. The SN65LVDS32 is a TIA/EIA-644 standard compliant LVDS receiver, which incorporates a passive open-circuit fail-safe detection circuit. The fail-safe circuit included in the SN65LVDS32 includes a pair of 300-kΩ pullup resistors on the bus pins.

The SN65LVDS31–32BEVM includes the SN65LVDS31 quad driver and SN65LVDS32B quad receiver. The SN65LVDS32B is a TIA/EIA-644 standard compliant LVDS receiver with extended common-mode capabilities and an active fail-safe circuit. The SN65LVDS32B receivers operate over a commonmode input voltage range of –2 V to 4.4 V, almost triple the operational rangerequired by the TIA/EIA–644 standard. The SN65LVDS32B's active-failsafe circuit includes a window comparator that provides operation over the entire input common-mode range. This allows for activation even when an external common-mode voltage is applied to the bus. A photograph of the SN65LVDS31–32BEVM is shown in Figure 1-1.

Copyright © 2000–2010, Texas Instruments Incorporated

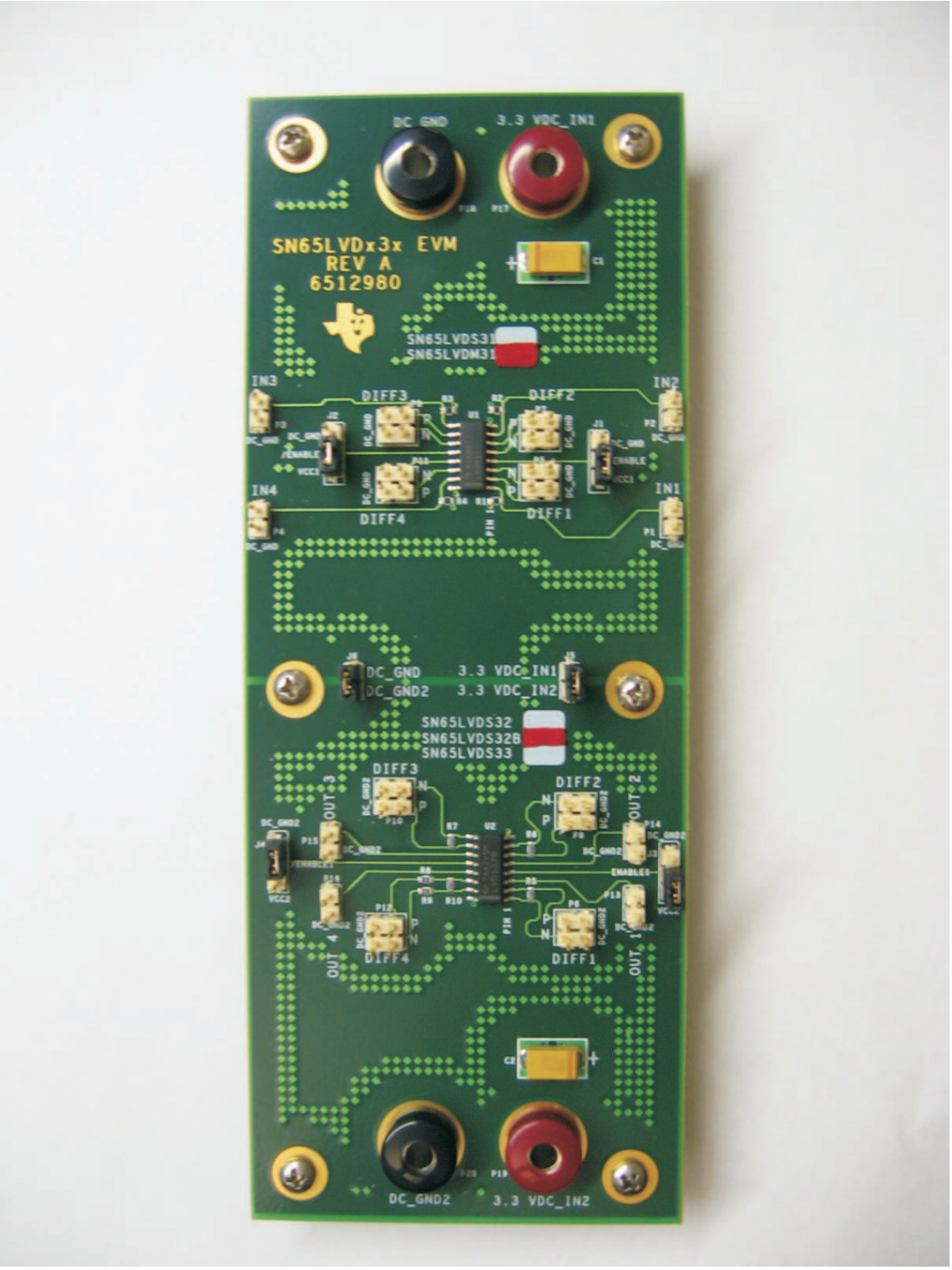

Figure 1-1. SN65LVDS31/32B EVM Printed-Circuit Board

Copyright © 2000–2010, Texas Instruments Incorporated

Table 1-2. Jumper Functionality

JUMPER NUMBER	FUNCTION
JMP1, JMP3	Enable pin (active high) High= shunt center pin to pin “V” Low = shunt center pin to pin “G”
JMP2, JMP4	Enable pin (active low) High= shunt center pin to pin “V” Low = shunt center pin to pin “G”
JMP5, JMP6	Ground shifts Installed = common GND and V_{DC} Uninstalled = different GND and V_{DC}
P1, P2, P3, P4	Inputs to SN65LVDM31/SN65LVDS31 driver
P5, P7, P9, P11	Differential outputs of driver
P13, P14, P15, P16	Outputs from SN65LVDS32/SN65LVDS32B/SN65LVDS33 receiver
P6, P8, P10, P12	Differential inputs to receivers

The SN65LVDM31–32BEVM includes the SN65LVDM31 quad driver and SN65LVDS32B quad receiver. The SN65LVDM31 is a multipoint LVDS driver that provides twice the drive current of standard LVDS compliant drivers to allow operation in doubly-terminated (multipoint) topologies, heavily loaded bus lines, or situations where increased noise margin is desired in a design. The SN65LVDM31 complies with the driver requirements of the TIA/EIA–644 standard, except for this doubling of the output current.

The SN65LVDS31-33EVM includes the SN65LVDS31 quad driver and the SN65LVDS33 quad receiver. The SN65LVDS33 is a TIA/EIA-644 standard compliant LVDS receiver. The SN65LVDS33 receiver incorporates the widest common-mode input voltage range of –4 V to 5 V, as well as an active-failsafe circuit that provides operation over the entire input common-mode range. The receiver also provides an input voltage range specification compatible with a 5-V PECL signal. Precise control of the differential input voltage threshold allows for inclusion of 50 mV of input voltage hysteresis to improve noise rejection on slowly changing input signals.

TI also offers a family of LVDS receivers incorporating integrated terminations. This family of devices is recognized by the LVDT string in their part numbers (e.g. SN65LVDT32B and SN65LVDTS33). The SN65LVDT32B and SN65LVDT33B are pin compatible with the SN65LVDS32, the SN65LVDS32B, and the SN65LVDS33. Although not offered on a separate EVM, user evaluation of the SN65LVDT32B and the SN65LVDT33 is possible by user replacement of the receivers included on any of these EVMs. Special EVM operating instructions are included below if evaluations of the SN65LVDT32B and SN65LVDT33 are desired.

Reference will be made throughout the rest of this document to the SN65LVDS31 and the SN65LVDS32. Recalling that the same PCB has been used for all four EVMs, and that EVM operation is identical for all four modules, please read these as a reference to either of the drivers (SN65LVDS31 and SN65LVDM31) and either of the receivers (SN65LVDS32, SN65LVDS32B, and SN65LVDS33). When special instructions are necessary for any of the devices, explicit device references will be included. Likewise, future references to the EVM should be understood to apply to any of the four available evaluation modules.

The EVM has been designed with the driver section on the top half of the board and the receiver section on the bottom half. The installed quad driver is designated U1, while the quad receiver is designated U2. The EVM, as delivered, incorporates 100-Ω termination resistors at the inputs to the four receivers (R5, R6, R7, and R10). If the user desires to evaluate an SN65LVDT32B or an SN65LVDT33, these four termination resistors must be removed.

Jumpers J5 and J6 are included to allow the driver and receiver portions of the board to either share the same power and ground source, or be powered separately for independent device analysis. Removal of these jumpers allows for the introduction of ground shifts between the driver and receiver, demonstrating the wide common-mode operation of the SN65LVDS32B and the SN65LVDS33. Refer to Chapter 5 of this user’s guide for guidelines on operating the EVM with forced ground shifts.

Copyright © 2000–2010, Texas Instruments Incorporated

Copyright © 2000–2010, Texas Instruments Incorporated

Equipment Required

This chapter provides a list of equipment required for the analysis of low-voltage differential signaling. It also provides a schematic diagram and parts list.

- 3.3-V_{DC} power supply (TEK-PS280 or equivalent)
- A transmission medium from the driver to the receiver (cable or wire)
- A function generator capable of supplying TTL level signaling rates of up to 400 Mbps. Note: 50-Ω source impedance.
- A high-bandwidth oscilloscope, preferably in the 4-GHz range.
- Differential and single-ended oscilloscope probes.

Copyright © 2000–2010, Texas Instruments Incorporated

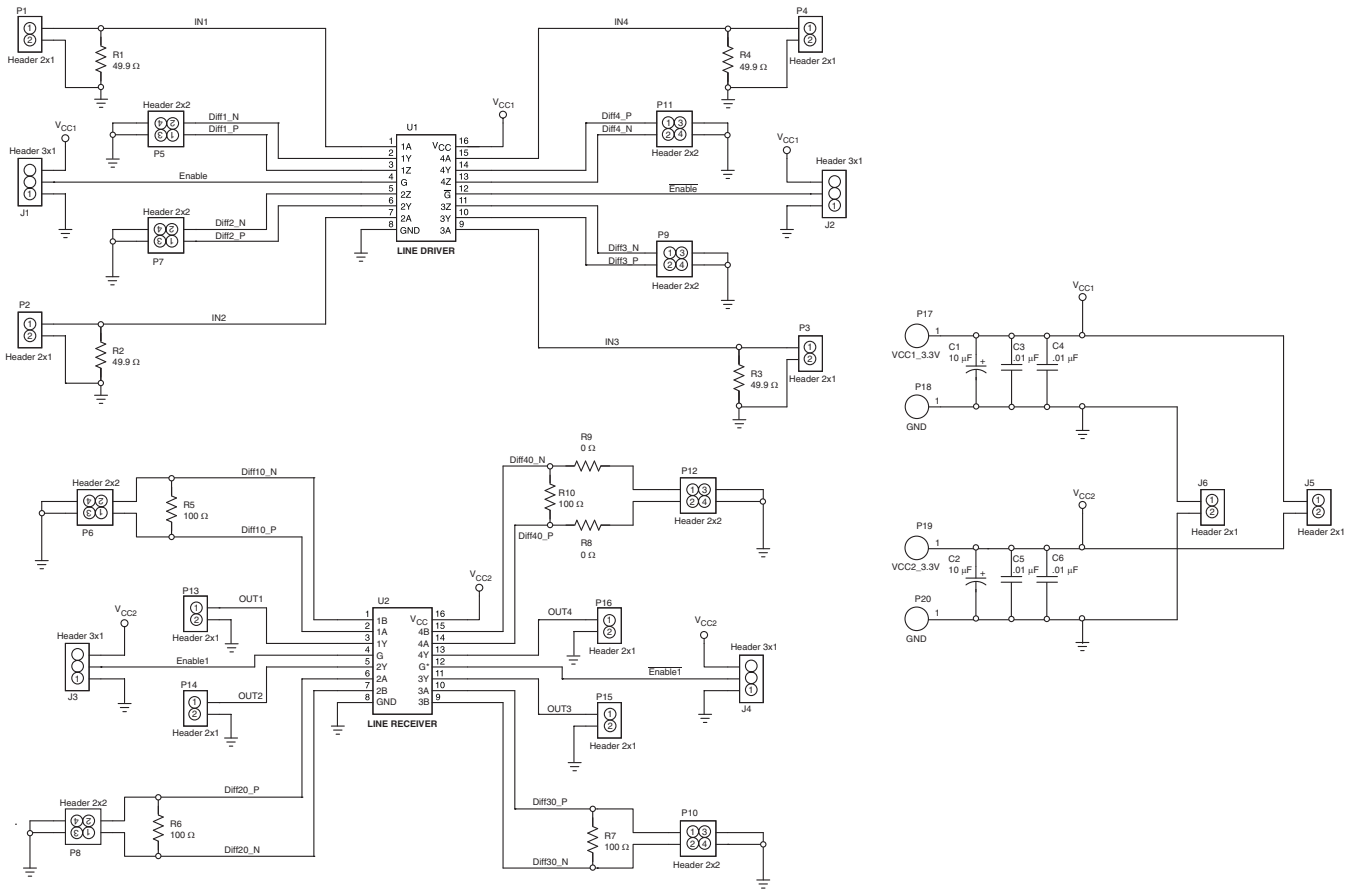

Figure 2-1. EVM Schematic Diagram

	QUAD DRIVERS (U1)		QUAD RECEIVERS (U2)		
EVM PCB	SN65LVDS31	SN65LVDM31	SN65LVDS32	SN65LVDS32B	SN65LVDS33
SLLP101–1	X		X		
SLLP101–2	X			X	
SLLP101–3		X		X	
SLLP101–4	X				X

Copyright © 2000–2010, Texas Instruments Incorporated

Table 2-1. Parts List (SLLP101–1, SLLP101–2, SLLP101–3, and SLLP101–4)

ITEM NO.	101-1 QTY.	101-2 QTY.	101-2 QTY.	101-4 QTY.	REF. DES.	DESCRIPTION	PART NUMBER	MFG.
1	2	2	2	2	C1, C2	Capacitor, 10.0 µF, tantalum	PCT3106TR–ND	Digi-Key
2	4	4	4	4	C3.C6	Capacitor, 0.01 µF	C0805C103K5RAC	Mallory
3	4	4	4	4	J1.J4	3-Position male post with shorting jumpers	68001–236/65474–010	Berg Elec
4	2	2	2	2	J5, J6	2-Position male post with shorting jumpers	68001–236/65474–010	Berg Elec
5	4	4	4	4	P1–P4	Connectors, SMA, edgemount	528–S0101	Allied
6	8	8	8	8	P5–P12	2-Position female post, SIP	905–3090	Allied
7	4	4	4	4	P13–P16	2-Position male post	518–1052	Allied
8	4	4	4	4	P17–P20	Banana jack connectors, female	528–0172	Allied
9	4	4	4	4	R1–R4	Resistors, 51 Ω, 805 PK	P51GCT–ND	Digi-Key
10	3	3	3	3	R5–R7	Resistors, 100 Ω, 603 PK	P100GCT–ND	Digi-Key
11	2	2	2	2	R8–R9	Resistors, 0 Ω, 603 (optional: 45.3 Ω)	P0.0GCT–ND	Digi-Key
12	1	1	1	1	R10	Resistors, 100 Ω, 603 (optional: 10.22 Ω)	P100GCT–ND	Digi-Key
13	1	0	1	1	U1	IC, Quad driver	SN65LVDS31D	TI
14	0	1	0	0	U1	IC, Quad driver	SN65LVDM31D	TI
15	0	0	0	1	U2	IC, Quad receiver	SN65LVDS32D	TI
16	0	1	1	0	U2	IC, Quad receiver	SN65LVDS32BD	TI
17	1	0	0	0	U2	IC, Quad receiver	SN65LVDS33D	TI
18	6	6	6	6	J1–J6	Jumper short, (use with items 3 and 4)	65474–010	Allied

Copyright © 2000–2010, Texas Instruments Incorporated

Copyright © 2000–2010, Texas Instruments Incorporated

Point-to-Point Transmission

This chapter shows the setup for point-to-point transmission.

The point-to-point configuration with one driver transmitting to one receiver is a typical transmission scheme. The transmission quality is superior, since there are no stubs and few discontinuities on the bus to degrade the signal. Note that the required 100-Ω termination resistor (R5) is already in place across the differential pair at the input of the receiver (U2).

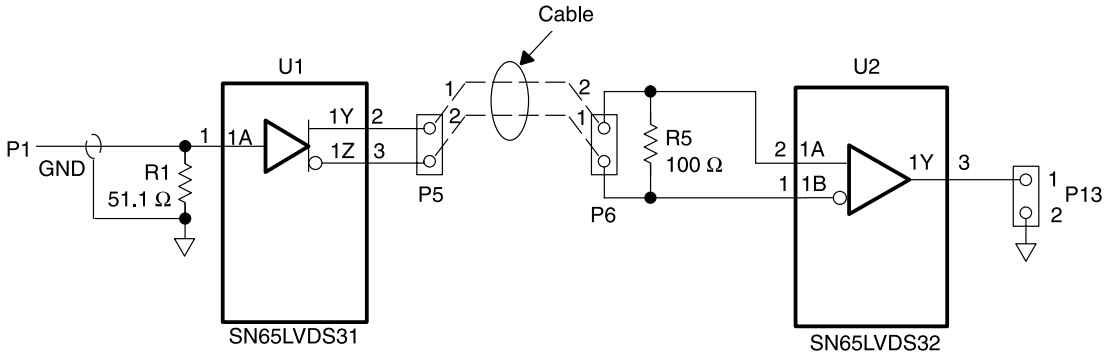

Figure 3-1. Point-to-Point Schematic Diagram

Copyright © 2000–2010, Texas Instruments Incorporated

Copyright © 2000–2010, Texas Instruments Incorporated

Multidrop Transmission

This chapter shows the setup for multidrop transmission.

The multidrop configuration with one driver transmitting to several receivers may be implemented as shown in Figure 4-1. In this application, only a single 100-Ω termination resistor is required across the differential pair at the inputs of the last receiver. Termination resistors at the inputs of the middle receivers in the configuration must be removed. To minimize reflections, line length between receivers should be kept as short as possible. Stub length should also be kept to a minimum. On the EVM, stub length is approximately 3 cm.

For a complete discussion of this configuration with up to 36 receivers, consult the TI application note, *LVDS Multidrop Connections*, literature number SLLA054.

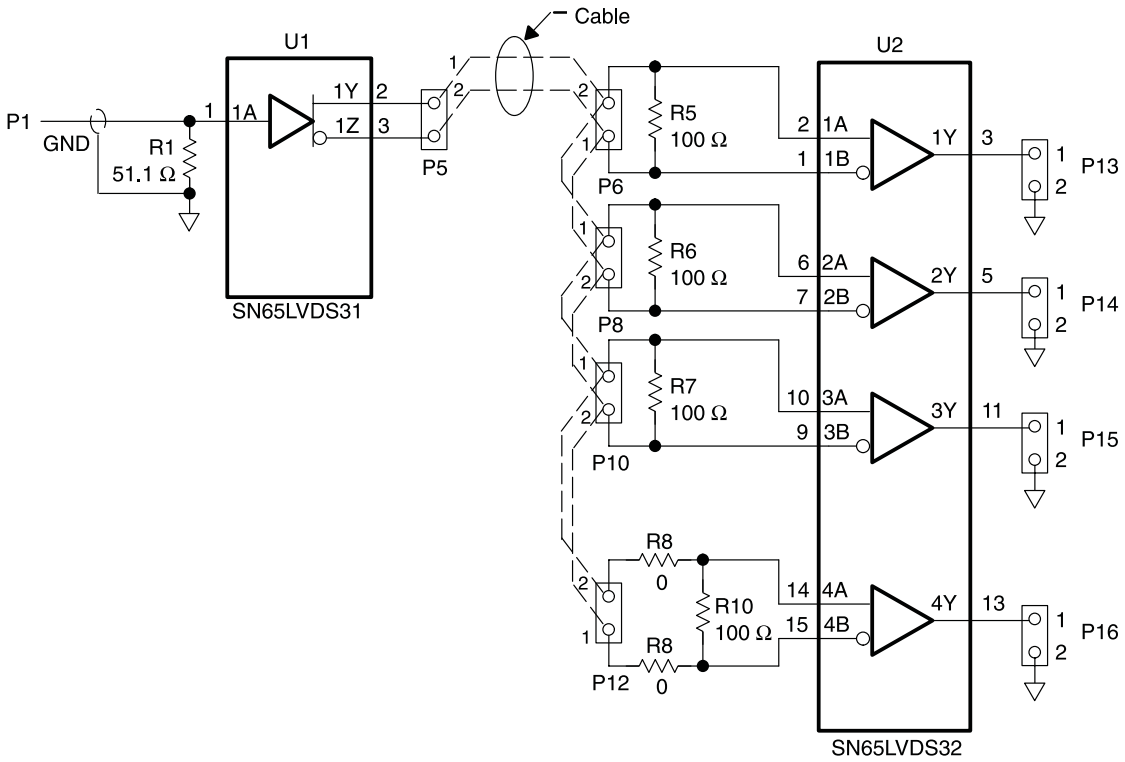

Termination resistors R5, R6, and R7 must be removed.

Figure 4-1. Multidrop Schematic Diagram

Copyright © 2000–2010, Texas Instruments Incorporated

Copyright © 2000–2010, Texas Instruments Incorporated

Evaluation of Receiver Operation During Ground Shifts

This chapter explains how to introduce ground shifts between the driver and the receiver to test the receiver operation over its full common-mode voltage input range.

LVDS driver outputs have an offset voltage of approximately 1.2 V. The SN65LVDS32 receiver complies with the TIA/EIA–644 standard. It correctly detects the logic level of the input signal when 100 mV of differential signal is present at its input, and the input common-mode voltage is between 0 V and 2.4 V. (The actual input common-mode range is also dependent upon the differential input voltage; see recommended operating condition in the data sheet for dependency.) The SN65LVDS32B provides operation over an input common-mode voltage range of –2 V to 4.4 V, whereas the SN65LVDS33 extends the operation to an input common-mode voltage range of –4 V to 5 V. Both the above mentioned receivers are equipped to correctly detect the input state with a 50-mV differential signal at its input.

input state with a 50-mV differential signal at its input. All EVMs can be used to evaluate the receiver operation in the presence of ground shifts between the driver and receiver. Testing of EVMs that host a SN65LVDS32B or a SN65LVDS33 will demonstrate the extended range operation of these devices.

Perform the following steps to demonstrate operation during ground shifts.

1. Remove the jumper shorts on jumpers J5 and J6.
   Three dc power supplies will be used for this test.
2. Using the first power supply (PS1), apply 3.3-V power to the driver section of the EVM (via connectors P17 and P18).
3. Using the second power supply (PS2), apply 3.3-V power to the receiver section of the EVM (via connectors P19 and P20).
4. Tie the third power supply (PS3) between the grounds of PS1 and PS2.
5. Initially set PS3 to 0 V.
6. Input a test signal to the driver while monitoring the output of a receiver (refer to Chapter 3, Point-to-Point Transmission).
7. Vary the ground shift between the driver and the receiver via adjustments to PS3.

A test setup is shown in Figure 5-1.

Copyright © 2000–2010, Texas Instruments Incorporated

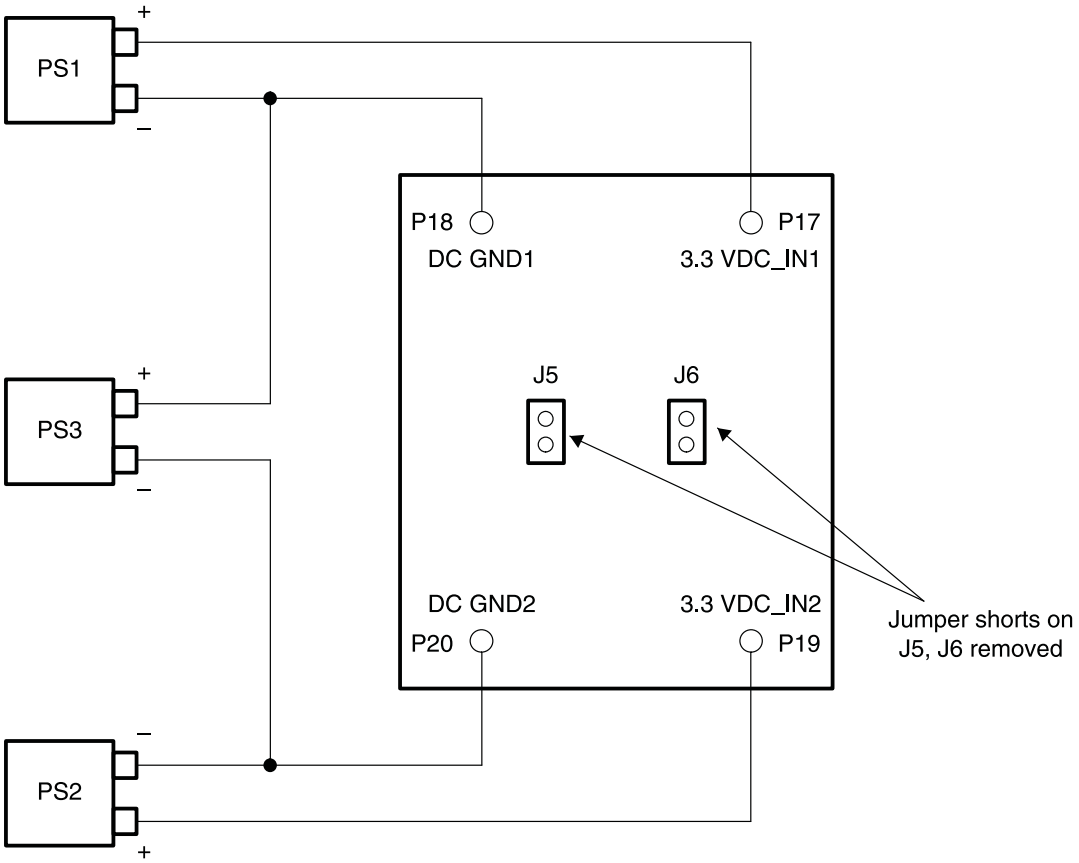

Figure 5-1. Test Setup

Copyright © 2000–2010, Texas Instruments Incorporated

The Application of TIA/EIA-422 Data to an LVDS Receiver

This chapter explains the application of TIA/EIA-422 data into an LVDS receiver.

The fourth channel of the receiver (4A and 4B) configured with the resistor divider network of R8, R9, and R10 may be used for the evaluation of TIA/EIA-422 data applied to an LVDS receiver. TIA/EIA-422 signaling voltage levels are adjusted to appropriate LVDS input voltage levels by installing 45-Ω resistors in the spaces provided for R8 and R9 on the evaluation board. The 100-Ω resistor (R10) must then be removed and replaced with a 10-Ω resistor as shown in Figure 6-1. This resistor divider network now comprises a total differential load of 100 Ω to match the characteristic impedance of a common transmission line, and reduces the TIA/EIA-422 maximum differential signal amplitude from 6 V to an appropriate 600 mV.

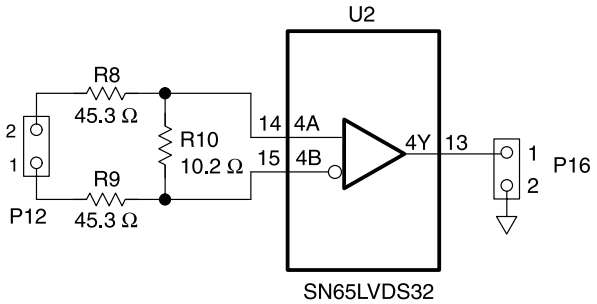

Figure 6-1. TIA/EIA-422 Data to an LVDS Receiver Schematic

Copyright © 2000–2010, Texas Instruments Incorporated

Copyright © 2000–2010, Texas Instruments Incorporated

References

This chapter contains a list of LVDS literature available.

There is a wide selection of the LVDS devices and related applications materials available to assist in the design and development of LVDS interfaces. This information is located at www.ti.com/sc/datatran. Input LVDS into the search tool or enter the part number of a specific device to obtain additional information.

1. LVDS Designer's Notes (literature number SLLA014A)
2. Reducing EMI With Low Voltage Differential Signaling (literature number SLLA030)
3. The Active Fail-Safe Feature of the SN65LVDS32B (literature number SLLA082)
4. A statistical Survey of Common-Mode Noise (literature number SLLA057)
5. Measuring Crosstalk in LVDS Systems (literature number SLLA064)
6. Interface Circuits for TIA/EIA–644 (LVDS) (literature number SLLA038)
7. Transmission at 200 Mbps in VME Card Cage Using LVDM (literature number SLLA088)
8. Performance of LVDS With Different Cables (literature number SLLA053)
9. LVDS Multidrop Connections (literature number SLLA054)

Copyright © 2000–2010, Texas Instruments Incorporated

IMPORTANT NOTICE

Texas Instruments Incorporated and its subsidiaries (TI) reserve the right to make corrections, modifications, enhancements, improvements, and other changes to its products and services at any time and to discontinue any product or service without notice. Customers should obtain the latest relevant information before placing orders and should verify that such information is current and complete. All products are sold subject to TI's terms and conditions of sale supplied at the time of order acknowledgment.

TI warrants performance of its hardware products to the specifications applicable at the time of sale in accordance with TI's standard warranty. Testing and other quality control techniques are used to the extent TI deems necessary to support this warranty. Except where mandated by government requirements, testing of all parameters of each product is not necessarily performed.

TI assumes no liability for applications assistance or customer product design. Customers are responsible for their products and applications using TI components. To minimize the risks associated with customer products and applications, customers should provide adequate design and operating safeguards.

TI does not warrant or represent that any license, either express or implied, is granted under any TI patent right, copyright, mask work right, or other TI intellectual property right relating to any combination, machine, or process in which TI products or services are used. Information published by TI regarding third-party products or services does not constitute a license from TI to use such products or services or a warranty or endorsement thereof. Use of such information may require a license from a third party under the patents or other intellectual property of the third party, or a license from TI under the patents or other intellectual property of TI.

Reproduction of TI information in TI data books or data sheets is permissible only if reproduction is without alteration and is accompanied by all associated warranties, conditions, limitations, and notices. Reproduction of this information with alteration is an unfair and deceptive business practice. TI is not responsible or liable for such altered documentation. Information of third parties may be subject to additional restrictions.

Resale of TI products or services with statements different from or beyond the parameters stated by TI for that product or service voids all express and any implied warranties for the associated TI product or service and is an unfair and deceptive business practice. TI is not responsible or liable for any such statements.

TI products are not authorized for use in safety-critical applications (such as life support) where a failure of the TI product would reasonably be expected to cause severe personal injury or death, unless officers of the parties have executed an agreement specifically governing such use. Buyers represent that they have all necessary expertise in the safety and regulatory ramifications of their applications, and acknowledge and agree that they are solely responsible for all legal, regulatory and safety-related requirements concerning their products and any use of TI products in such safety-critical applications, notwithstanding any applications-related information or support that may be provided by TI. Further, Buyers must fully indemnify TI and its representatives against any damages arising out of the use of TI products in such safety-critical applications.

TI products are neither designed nor intended for use in military/aerospace applications or environments unless the TI products are specifically designated by TI as military-grade or "enhanced plastic." Only products designated by TI as military-grade meet military specifications. Buyers acknowledge and agree that any such use of TI products which TI has not designated as military-grade is solely at the Buyer's risk, and that they are solely responsible for compliance with all legal and regulatory requirements in connection with such use.

TI products are neither designed nor intended for use in automotive applications or environments unless the specific TI products are designated by TI as compliant with ISO/TS 16949 requirements. Buyers acknowledge and agree that, if they use any non-designated products in automotive applications, TI will not be responsible for any failure to meet such requirements.

Following are URLs where you can obtain information on other Texas Instruments products and application solutions:

Products		**Applications**	
Amplifiers	amplifier.ti.com	Audio	www.ti.com/audio
Data Converters	dataconverter.ti.com	Automotive	www.ti.com/automotive
DLP® Products	www.dlp.com	Communications and Telecom	www.ti.com/communications
DSP	dsp.ti.com	Computers and Peripherals	www.ti.com/computers
Clocks and Timers	www.ti.com/clocks	Consumer Electronics	www.ti.com/consumer-apps
Interface	interface.ti.com	Energy	www.ti.com/energy
Logic	logic.ti.com	Industrial	www.ti.com/industrial
Power Mgmt	power.ti.com	Medical	www.ti.com/medical
Microcontrollers	microcontroller.ti.com	Security	www.ti.com/security
RFID	www.ti-rfid.com	Space, Avionics & Defense	www.ti.com/space-avionics-defense
RF/IF and ZigBee® Solutions	www.ti.com/lprf	Video and Imaging	www.ti.com/video
		Wireless	www.ti.com/wireless-apps

Mailing Address: Texas Instruments, Post Office Box 655303, Dallas, Texas 75265
Copyright © 2010, Texas Instruments Incorporated