THIS DRAWING IS UNPUBLISHED. RELEASED FOR PUBLICATION -,- .
© COPYRIGHT - By - ALL RIGHTS RESERVED.

LOC	DIST
AF	50

REVISIONS

P	LTR	DESCRIPTION	DATE	DWN	APVD
	B	REVISED PER ECR-13-011489	11DEC2013	KH	PD

1 SUPPLIED IN LOOSE PIECE

2 .000150 MIN TIN OVER .000050 MIN NICKEL.

3 MATERIAL: BRASS

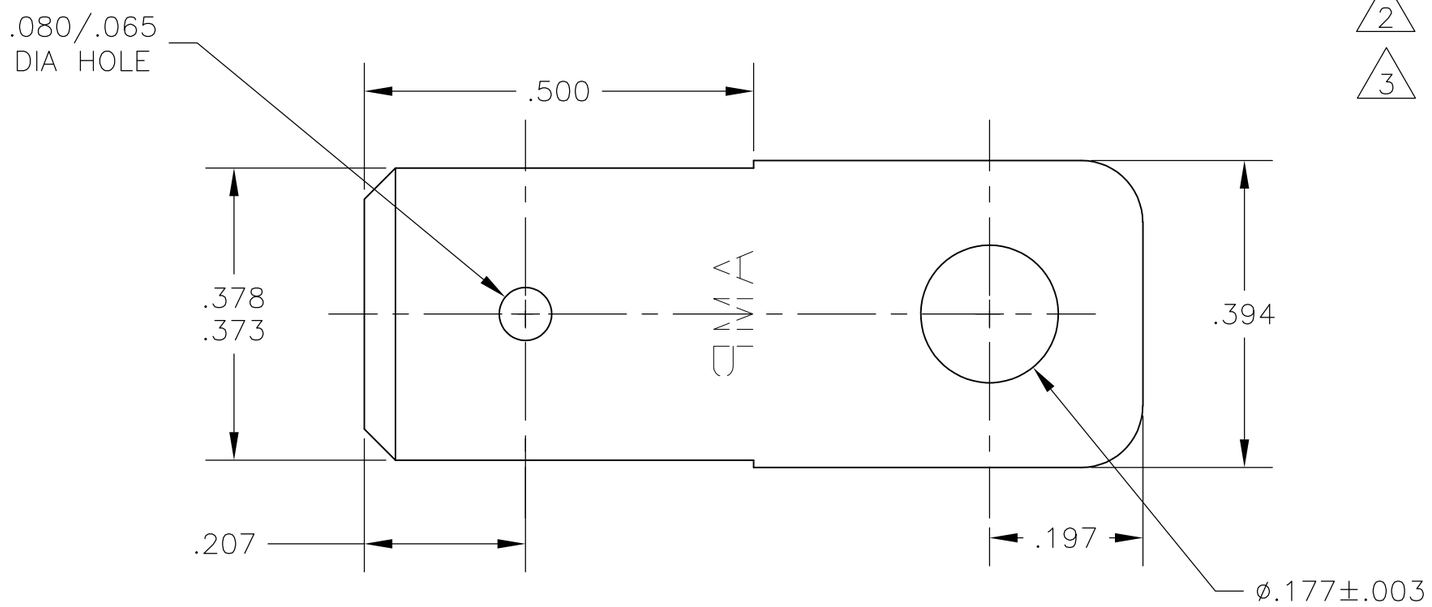

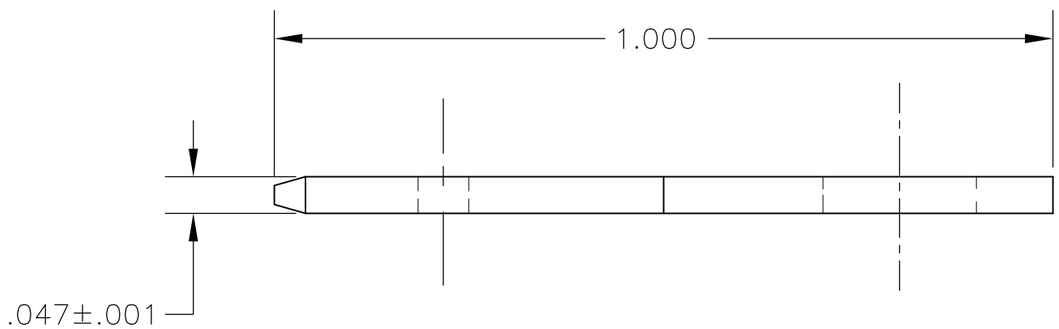

1742375-1

PART NO

THIS DRAWING IS A CONTROLLED DOCUMENT.

DIMENSIONS: INCHES

TOLERANCES UNLESS OTHERWISE SPECIFIED:

0 PLC	± -
1 PLC	± -
2 PLC	± -
3 PLC	± .010
4 PLC	± -
ANGLES	± 5°

MATERIAL 3

FINISH 2

DWN	jr ruth	24OCT05
CHK	K RANDOLPH	24OCT05
APVD	K RANDOLPH	24OCT05
PRODUCT SPEC	—	
APPLICATION SPEC	—	
WEIGHT	—	

TE Connectivity

NAME: TAB, FASTON, .375 SERIES

SIZE	CAGE CODE	DRAWING NO	RESTRICTED TO
A3	00779	C-1742375	—

CUSTOMER DRAWING

SCALE	SHEET	REV
5:1	1 OF 1	B