DATE	REV	ECN	APP'D. BY
1-20-06	B2	7451	JM
6-9-06	B3	7651	TRM
6-19-06	B4	7656	TRM

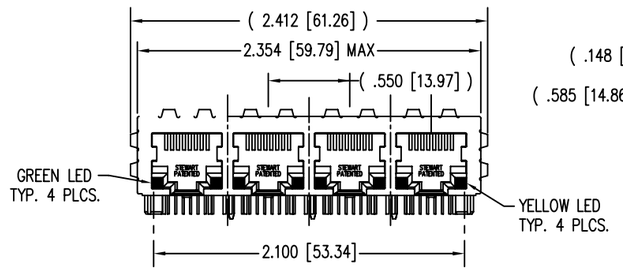

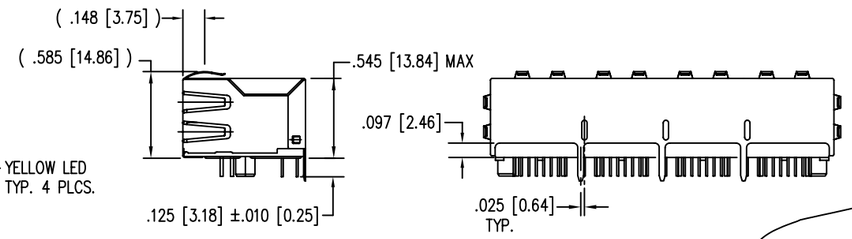

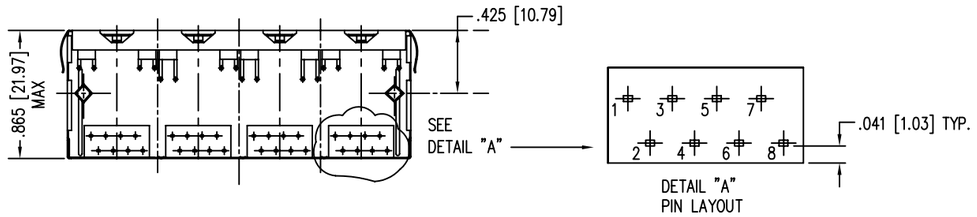

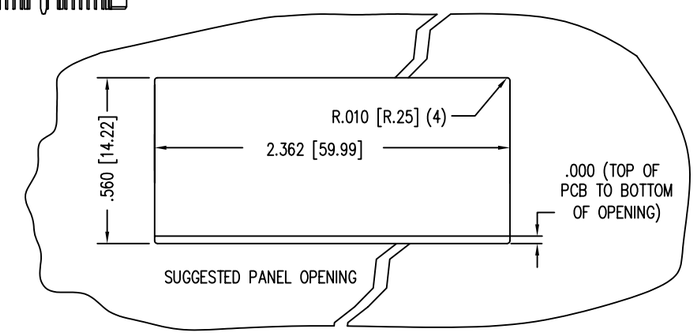

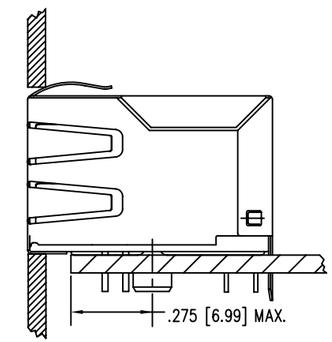

LED SPECIFICATION			
STANDARD LED	WAVELENGTH	FORWARD V (MAX)	*(TYP)
GREEN	565 nm	2.5 V	2.2 V
YELLOW	590 nm	2.5 V	2.1 V

*WITH A FORWARD CURRENT OF 20 mA (TYP)

LED POLARITY
(ENLARGED VIEW)

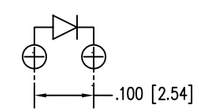

SINGLE COLOR LED

NOTES:

1. CONNECTOR MATERIALS:
   HOUSING: THERMOPLASTIC UL94 V-0
   CONTACTS/SHIELD: COPPER ALLOY
   SHIELD PLATING: NICKEL OR TIN
   CONTACT PLATING: SELECTIVE GOLD IN CONTACT AREA
2. PRODUCT DESIGNED FOR CATEGORY 5 APPLICATIONS.
3. DIMENSIONS AND TOLERANCES COMPLY WITH FCC/CFR 47, PART 68.
4. THE SUGGESTED PANEL OPENING IS INTENDED TO GIVE USER THE ABILITY TO HAVE REASONABLE JACK/PANEL CLEARANCES, YET MAINTAIN GROUNDING CAPABILITY. THESE VARIABLES CAN BE ADJUSTED IN EITHER DIRECTION BUT MAY CARRY SOME CONSEQUENCES IN THE FORM OF LOWER MATING FORCES OR TIGHTER ASSEMBLY TOLERANCES.
5. FOR PRODUCT SPECIFCATIONS SEE PR022-01.

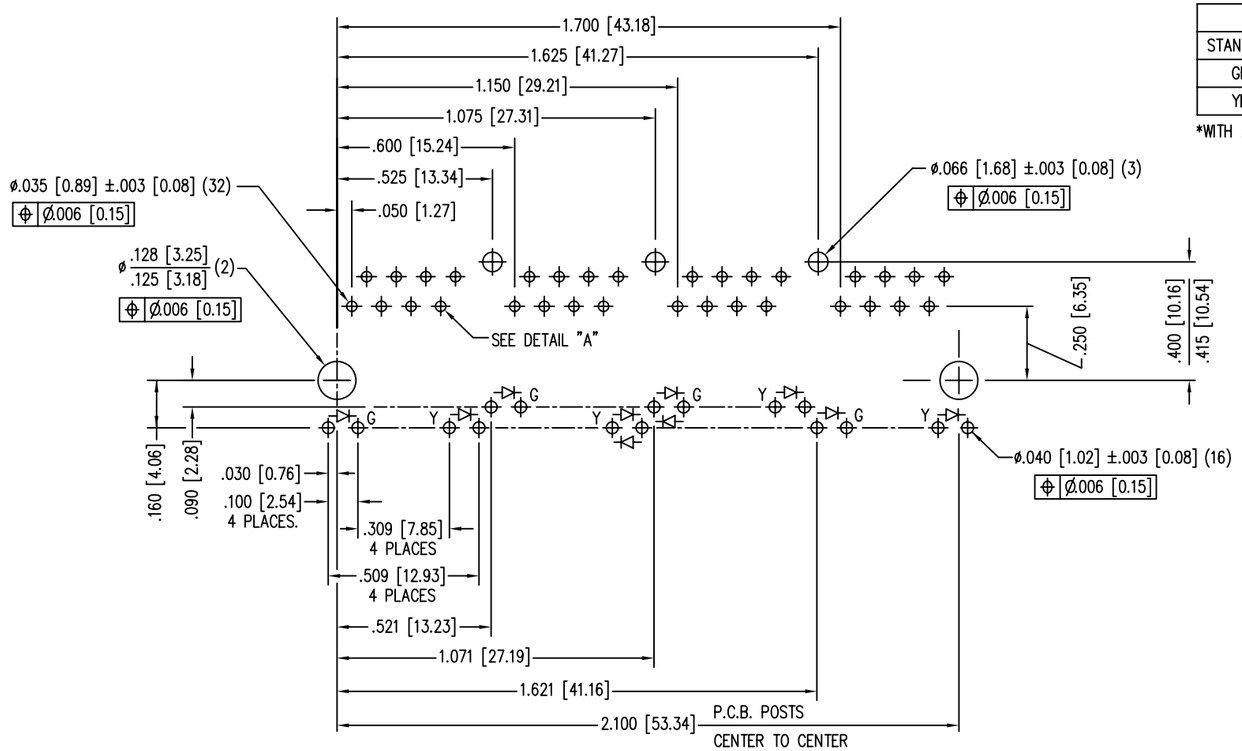

P.C.B. RECOMMENDED HOLE LAYOUT
SEEN FROM COMPONENT SIDE
ALL CENTERLINE DIMENSIONS ARE BASIC

RoHS 5

50 MICRO-INCHES [1.27um]	SS-748804SC5-GY-PG4-BZ-50
CONTACT PLATING IN MATING AREA	PART NUMBER

THIRD ANGLE PROJECTION

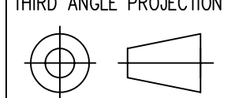

DO NOT SCALE DRAWING

DRAWING IS SUBJECT TO CHANGE WITHOUT NOTICE

DIMENSIONS: INCHES [METRIC]

UNLESS OTHERWISE SPECIFIED TOLERANCES ARE ±.005 [0.13] ANGLES ARE ± 1°

SHEET NO. 1 OF 1

Bel Stewart Connector

11118 Susquehanna Trail South
Glen Rock, PA 17327-9199
(717) 235-7512 Fax: (717) 235-7954 http://www.stewartconnector.com

TITLE: EIGHT CONTACT, EIGHT POSITION CAT 5 JACK, EMI-RFI SHIELDED ESD GROUND, 4 PORT PCB HARMONICA LED PAC

THIS DRAWING AND THE SUBJECT MATTER SHOWN THEREON ARE CONFIDENTIAL AND THE PROPRIETARY PROPERTY OF BEL STEWART CONNECTOR AND SHALL NOT BE REPRODUCED, COPIED, OR USED IN ANY MANNER WITHOUT PRIOR WRITTEN CONSENT OF BEL STEWART CONNECTOR. THE SUBJECT MATTER MAY BE PATENTED OR A PATENT MAY BE PENDING.

DRN BY:	RVO	DATE	3-23-05
APPD BY:	RGC	DATE	3-23-05
DWG NO.	CT740048	REV.	B4

REV. 7/3/03

AutoCAD