THIS DRAWING IS UNPUBLISHED. RELEASED FOR PUBLICATION -,- .
© COPYRIGHT - BY TYCO ELECTRONICS CORPORATION. ALL RIGHTS RESERVED.

LOC	DIST
FT	0

REVISIONS

P	LTR	DESCRIPTION	DATE	DWN	APVD
	T	REVISED PER 0G3B-0095-05	3/31/05	SS	GS

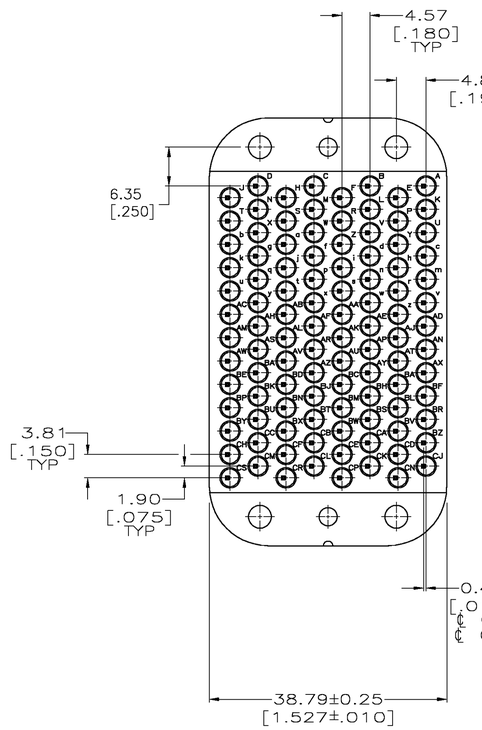

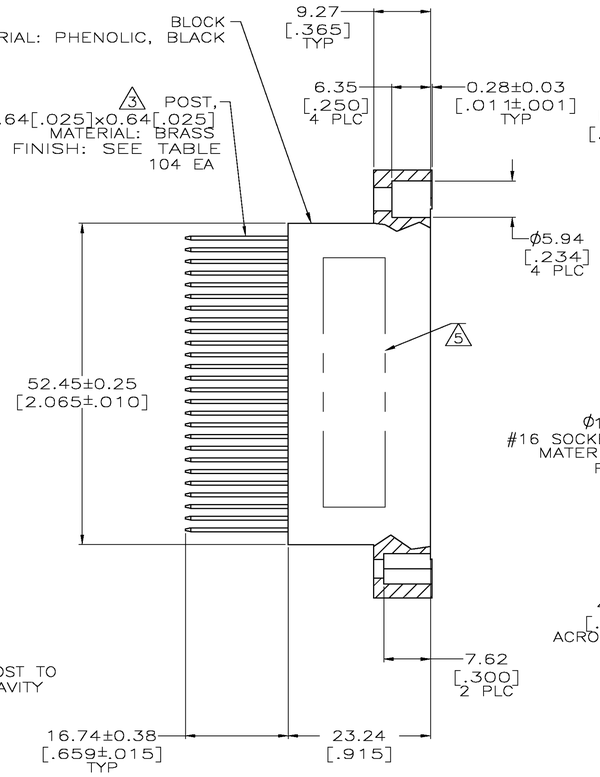

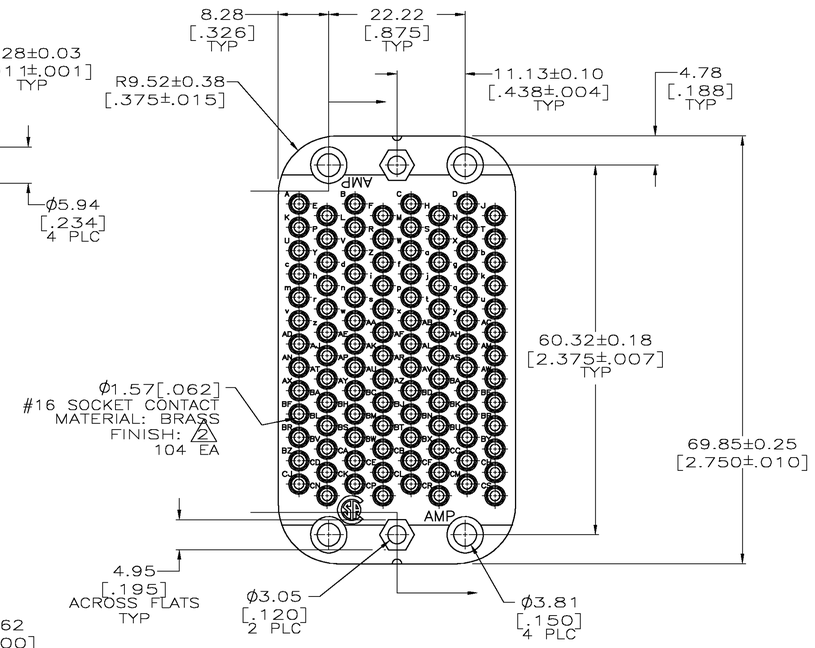

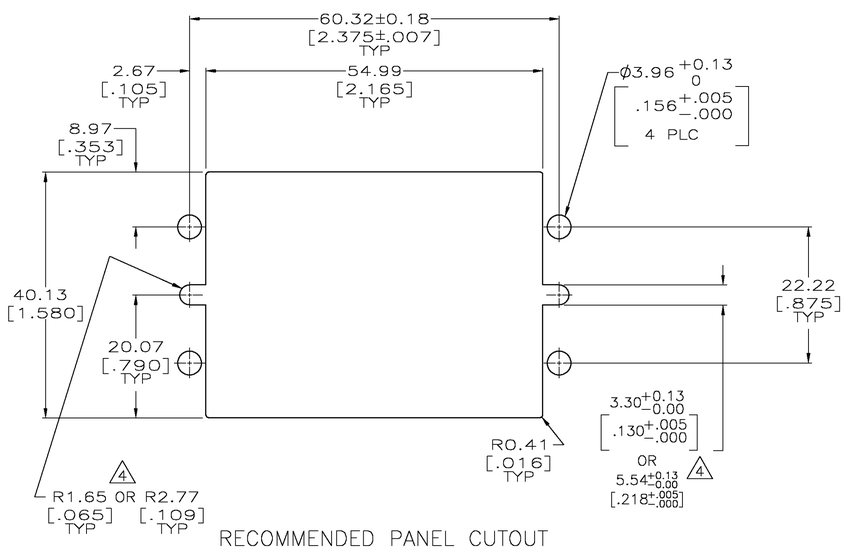

RECOMMENDED PANEL CUTOUT

1. 25.4um[.000100] MIN TIN-LEAD OVER 1.27um[.000050] MIN NICKEL.
2. 0.76um[.000030] MIN GOLD, INTERNALLY, FOR A DISTANCE OF 5.08[.200] MIN FROM MATING END, GOLD FLASH ON THE REMAINDER, ALL OVER 0.76um[.000030] MIN NICKEL.
3. POSTS ARE SEMI AUTOMATICALLY WIREABLE AND WILL ACCOMODATE 3 TERMINATIONS.
4. ALTERNATE DIMENSION FOR USE WITH JACKSCREWS.
5. AMP, PART NUMBER AND DATE CODE INK STAMPED IN THIS AREA.
6. #24 AWG MAX WIRE TO BE USED WITH THIS CONNECTOR.
7. 25.4um[.000100] MIN TIN OVER 1.27um[.000050] MIN NICKEL.

POST FINISH	PART NUMBER
7	205359-8
1	205359-1

THIS DRAWING IS A CONTROLLED DOCUMENT.

DIMENSIONS: mm [INCHES]

TOLERANCES UNLESS OTHERWISE SPECIFIED:
0 PLC ± –
1 PLC ± –
2 PLC ± 0.13 [.005]
3 PLC ± –
4 PLC ± –
ANGLES ± –

MATERIAL: SEE CALLOUTS
FINISH: SEE CALLOUTS

DWN C.REIFSNYDER 09 FEB 95
CHK R.STONE 22 FEB 95
APVD M.MCALONIS 22 FEB 95
PRODUCT SPEC –
APPLICATION SPEC –
WEIGHT –

tyco Electronics
Tyco Electronics Corporation
Harrisburg, Pa 17105-3608

NAME: SOCKET ASSY, 104 POSN, AUTOWIREABLE, STANDARD M SERIES

SIZE	CAGE CODE	DRAWING NO	RESTRICTED TO
A1	00779	C-205359	–

CUSTOMER DRAWING | SCALE 2:1 | SHEET 1 OF 1 | REV T