THIS DRAWING IS UNPUBLISHED. RELEASED FOR PUBLICATION -,- .
© COPYRIGHT - By - ALL RIGHTS RESERVED.

REVISIONS

P	LTR	DESCRIPTION	DATE	DWN	APVD
	H3	REVISED PER ECO-15-016493	26NOV2015	NK	DR

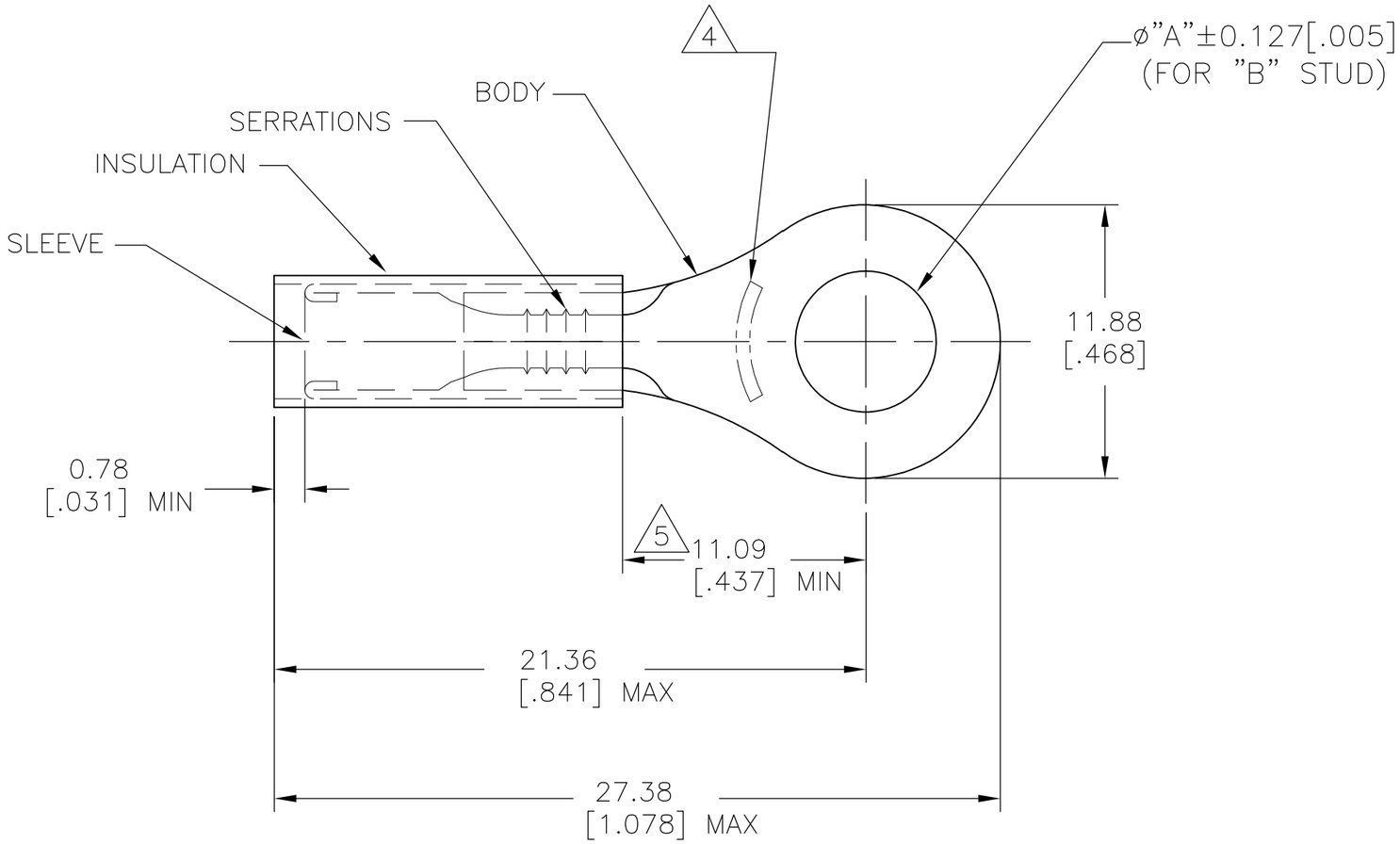

1 BODY: COPPER ASTM B152
NICKEL PL SAE AMS QQ-N-290
0.0076[.0003] AVG. EXT. THK
SLEEVE: COPPER ASTM B152
NICKEL PL SAE AMS QQ-N-290
[0.00076].00003 AVG EXT. THK

2 FOR 1.39[.055] TO 3.43[.135] WIRE INSULATION DIA.

3 TONGUE MATERIAL THK: 0.78±0.05[.031±.002]

4 STAMP AMP 18-16* APPROX AS SHOWN

5 DIMENSION APPLIES FROM EDGE OF METAL WIRE BARREL TO CENTER OF STUD HOLE

QTY	"B"	"A"	INSULATION MATERIAL	PACKAGE TYPE	PART NO.
PRELIMINARY	1000	M6 [1/4]	6.73 [.265]	PVDF COLOR: ORANGE	LOOSE PIECE	50837-4
	1000	M6 [1/4]	6.73 [.265]	PTFE (ASTM D3295) COLOR: ORANGE	LOOSE PIECE	50837

AMP INCORPORATED
CUSTOMER SERVICE SYSTEMS

FOR ADDITIONAL PRODUCT INFORMATION OR COPIES OF DRAWINGS AND TECHNICAL DOCUMENTS	PRODUCT INFORMATION CENTER 1-800-522-6752
FOR APPLICATION TOOLING INFORMATION	TOOLING ASSISTANCE CENTER 1-800-722-1111
FOR ORDER ENTRY	1-800-526-5142

MAX RECOMMENDED OPERATING TEMPERATURE: 288°C [550°F]

VOLTAGE RATING: 300V MAX

CIRCULAR MIL AREA: 0.81-1.42mm² [1,600-2,800] STRANDED WIRE ONLY

THIS DRAWING IS A CONTROLLED DOCUMENT.

DIMENSIONS: mm [INCHES]

TOLERANCES UNLESS OTHERWISE SPECIFIED: REMOVE BURRS, BREAK SHARPE EDGES .015 R MAX

0 PLC	± -
1 PLC	± -
2 PLC	± 0.20 [.008]
3 PLC	± -
4 PLC	± -
ANGLES	± 5°

MATERIAL 1 SEE TABLE

FINISH 1 SEE TABLE

DWN	NAGALAKSHMI K	13OCT2015
CHK	MERCURIO MAURIZIO	13OCT2015
APVD	MERCURIO MAURIZIO	13OCT2015
PRODUCT SPEC	—	
APPLICATION SPEC	—	
WEIGHT	—	

TE Connectivity

NAME: WIRE TERMINAL
PIDG, STRATO-THERM, RING TONGUE
WIRE SIZE : 18-16

SIZE	CAGE CODE	DRAWING NO	RESTRICTED TO
A3	00779	C-50837	—

CUSTOMER DRAWING | SCALE NTS | SHEET 1 OF 1 | REV H3

1470-19 (1/15)