MATERIAL NUMBER	OLD PART NUMBER	FINISHED LENGTH
130013-0515	1R5006A24A120	12.00" +1.75" -0 [.3M +44.5 -0]

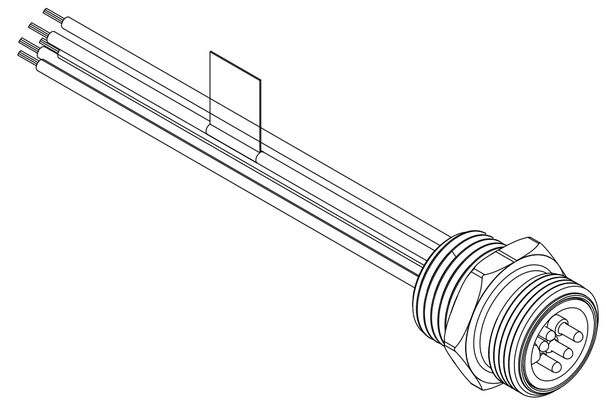

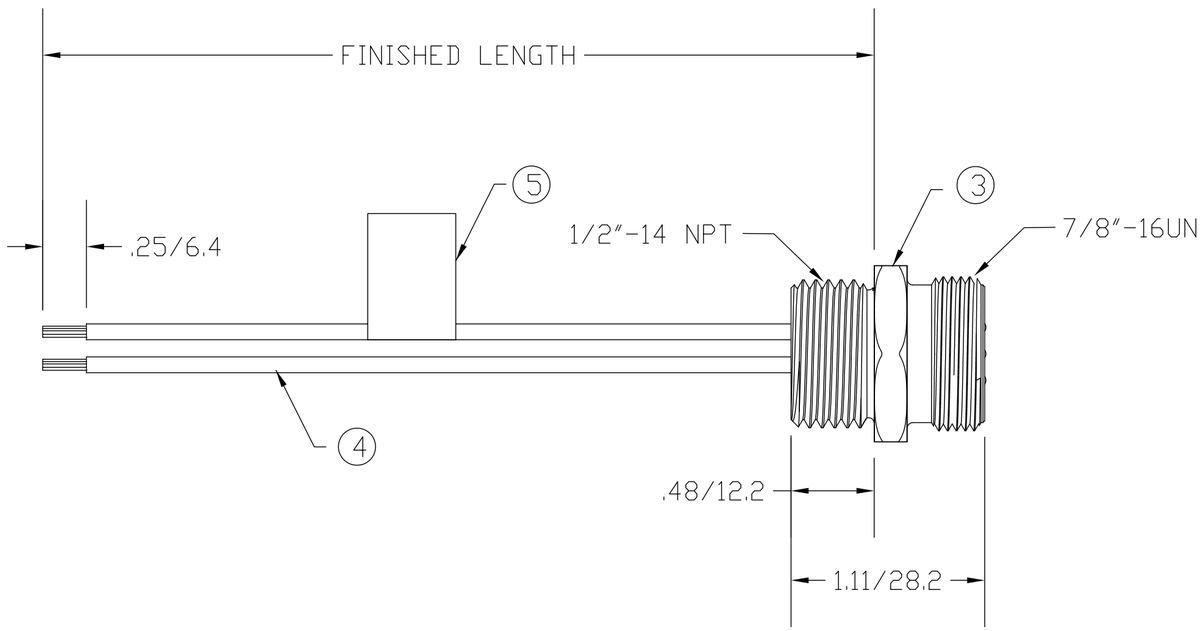

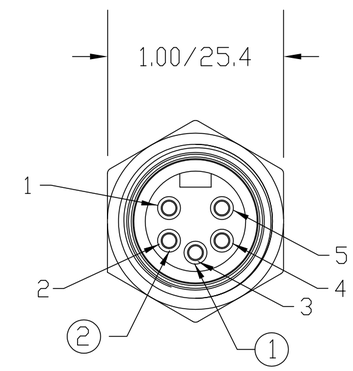

MALE FACE VIEW

1	RED WITH #1
2	RED WITH #2
3	GREEN-GND
4	RED WITH #4
5	RED WITH #5

WIRING DIAGRAM

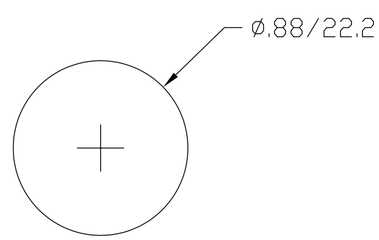

KNOCKOUT HOLE

VOLTAGE RATING	600 VAC/VDC
AMPERAGE RATING	8 AMPS
PROTECTION	IP67
OPERATING TEMPERATURE	-20°C TO 105°C
UL CERTIFICATIONS	UL LISTED, FILE NO. E258922
CSA CERTIFICATIONS	CSA CERTIFIED, FILE NO. LR6837

ITEM	COMPONENT	MATERIAL	FINISH
1	INSERT	PVC	YELLOW
2	CONTACT PIN	COPPER ALLOY	GOLD OVER NICKEL
3	RECEPTACLE SHELL	ZINC DIE CAST	BLACK E-COATED
4	CONDUCTOR - 16 AWG. 26 x #30 COPPER STRANDING, 600V	PVC	SEE WIRING DIAGRAM
5	FLAG LABEL	PLASTIC FILM	BLACK/YELLOW

RLSD DRAWING
EC NO: WNA2010-0425
DRWN: BWOODMAN 2010/01/08
CH'KD: TW
APPR: JFMURPHY 2010/01/14
DESCRIPTION
A
REV

QUALITY SYMBOL
▼=0
C=0

GENERAL TOLERANCES (UNLESS SPECIFIED)

	mm	INCH
4 PLACES	±---	±---
3 PLACES	±---	±.005
2 PLACES	±0.13	±.010
1 PLACE	±0.25	±.020
ANGULAR ±1/2°		

DRAFT WHERE APPLICABLE MUST REMAIN WITHIN DIMENSIONS

DIMENSION STYLE: IN/MM
SCALE: 1:1
DESIGN UNITS: INCH
THIRD ANGLE PROJECTION

DRAWN BY: ---- DATE: ----
CHECKED BY: TW DATE: 2010/01/08
APPROVED BY: JFMURPHY DATE: 2010/01/14

TITLE: MINI-CHANGE RECEPTACLE 5 POLE MALE 1/2 NPT AUTO CODE

molex MOLEX INCORPORATED

MATERIAL NO.: SEE CHART
DOCUMENT NO.: SD-130013-024
SHEET NO.: 1 0F 1
SIZE: C

THIS DRAWING CONTAINS INFORMATION THAT IS PROPRIETARY TO MOLEX INCORPORATED AND SHOULD NOT BE USED WITHOUT WRITTEN PERMISSION