REV.	DESCRIPTION/ECO NO.	DATE
	RELEASED	4/19/12

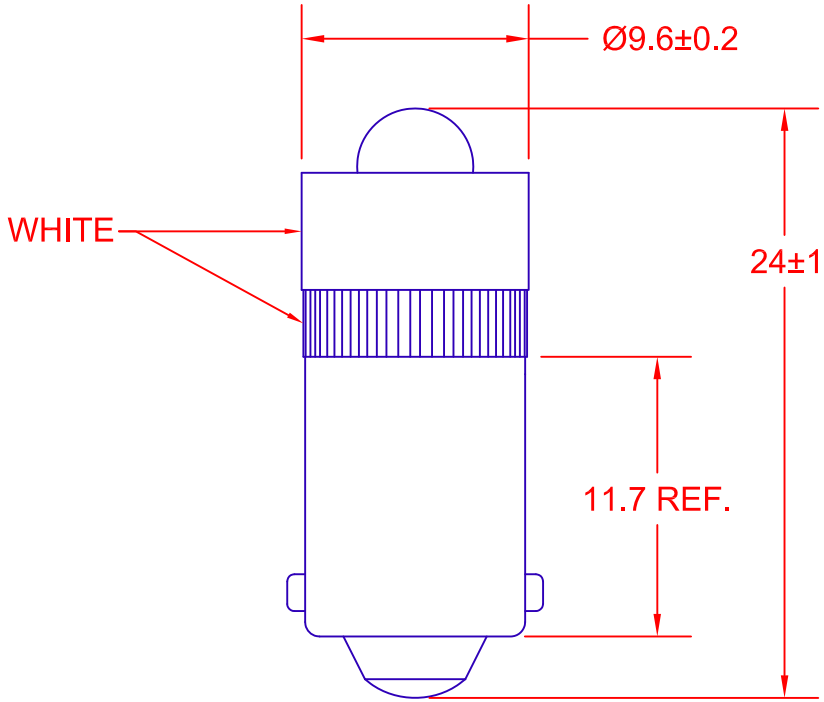

FEATURES

Non-Polarized
24V AC or DC Operation

ELECTRICAL OPTICAL CHARACTERISTICS

COLOR	AC/DC VOLTS	AMPS (mA)	LUMINOUS INTENSITY (mcd)	COLOR TEMPERATURE	50% POWER ANGLE (deg.)
COOL WHITE	24	20 (MAX.)	TYP. 7,000	6000K	30

JKL PART NO.: LE-BA9S-24W

METRIC THIRD ANGLE PROJECTION	DIMENSIONS ARE IN MILLIMETERS TOLERANCE UNLESS OTHERWISE SPECIFIED 1 PL +/- 0.2 2 PL +/- 0.20 ANGLE +/- 0	JKL COMPONENTS CORPORATION TITLE 24V T-3 1/4 BAYONET BASED LED					
DRAWN BY L. WENGSTROM	APPV'D BY L.R.	DATE 4/19/12	SIZE A	FSCM NO. 55335	DRAWING NO. LE-BA9S-24W		
- CAD DRAWING - MANUAL REVISIONS NOT PERMITTED			SCALE NONE	RELEASED DATE 4/19/12	REVISION DATE	REV. NO.	SHEET 1 OF 1

Mouser Electronics

Authorized Distributor

Click to View Pricing, Inventory, Delivery & Lifecycle Information:

JKL Components:

LE-BA9S-24W