MIC2505/6

Single 2A/Dual 1A High-Side Switches

Features

- Low MOSFET On-Resistance to 3.0V
  - 30 mΩ Typical at 5V (MIC2505 Series)
  - 35 mΩ Typical at 3.3V (MIC2505 Series)
  - 75 mΩ Typical at 5V (Each MIC2506 Output)
  - 80 mΩ Typical at 3.3V (Each MIC2506 Output)
- 3.0V to 7.5V Input
- 110 µA Typical On-State Supply Current
- 1 µA Typical Off-State Supply Current
- Output Can be Forced Higher than Input (Off-State)
- Current-Limit
- Thermal Shutdown
- 2.5V Undervoltage Lockout (UVLO)
- Open-Load Detection (MIC2505YN/M and MIC2506YN/M Only)
- Open-Drain Fault Flag
- 5 ms (Slow) Turn-On and Fast Turn-Off
- Logic-Level Control/Enable Input

Applications

- USB Power Distribution
- 3.3V and 5V Power Management
- PC Card Inrush Limiting Switch
- Hot Plug-In Power Supplies
- Battery Charger Circuits

General Description

The MIC2505, MIC2505-1, MIC2505-2, and MIC2506 are single and dual integrated high-side power switches that consist of TTL-compatible control/enable inputs, a charge pump, and protected N-channel MOSFETs. The MIC2505/6 family can be used instead of separate high-side drivers and MOSFETs in many low-voltage applications.

The MIC2505/6 family controls voltages ranging from 3.0V to 7.5V. The MIC2505-series can deliver at least 2A continuous current while the MIC2506 can deliver at least 1A continuous current from each output. A slow turn-on feature prevents high inrush current when switching capacitive loads. The internal control circuitry is powered from the same 3.0V to 7.5V. Within the device's input range, outputs can be forced higher than the input voltage when disabled.

Multipurpose open-drain fault flag outputs indicate overcurrent limiting, open-load detection (except MIC2505-1 and -2 versions), thermal shutdown, or undervoltage lockout for each channel.

Overcurrent limiting is internally fixed and requires no external components.

Open-load detection is active when the switch is off. When off, a normal load pulls the output pin low. If the load is open, an optional, external, high-value resistor pulls the output pin high, triggering the fault flag. MIC2505-1 and -2 versions are tailored to Universal Serial Bus (USB) applications and do not include open-load detection.

Thermal shutdown turns off the output if the die temperature exceeds approximately 135°C. If enabled, the switch automatically restarts when the temperature falls 10°C.

Undervoltage lockout (UVLO) shuts off the output if the supply drops below 2.3V typical and re-enables the output when the supply exceeds 2.5V typical.

© 2016 Microchip Technology Inc.

Package Types

MIC2505/-1/-2
8-Pin SOIC (M)
(Top View)

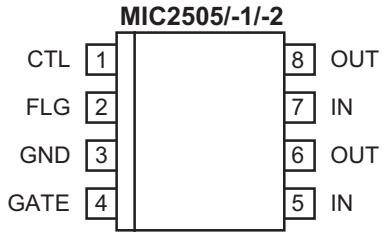

MIC2506
8-Pin SOIC (M)
(Top View)

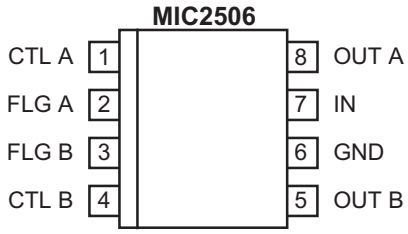

Typical Application Schematics

Single and Dual Switch/Circuit Breakers with Open-Load Detection and Fault Output

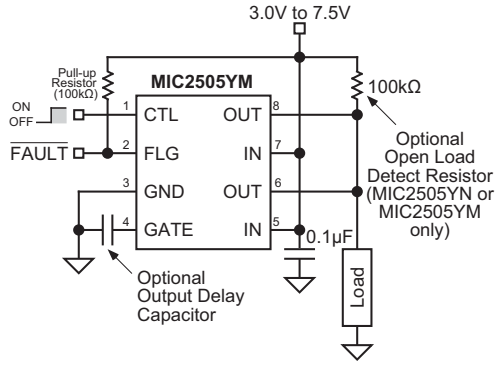

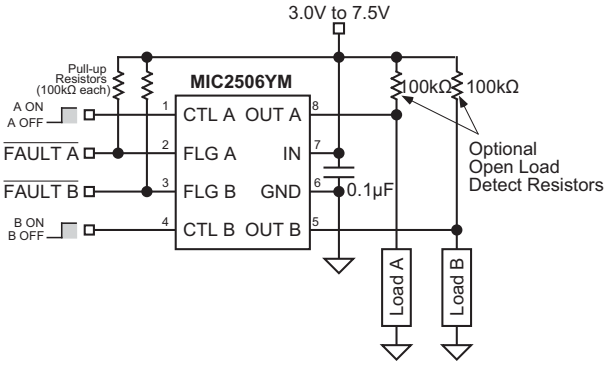

© 2016 Microchip Technology Inc.

Functional Block Diagrams

MIC2505 Series Block Diagram

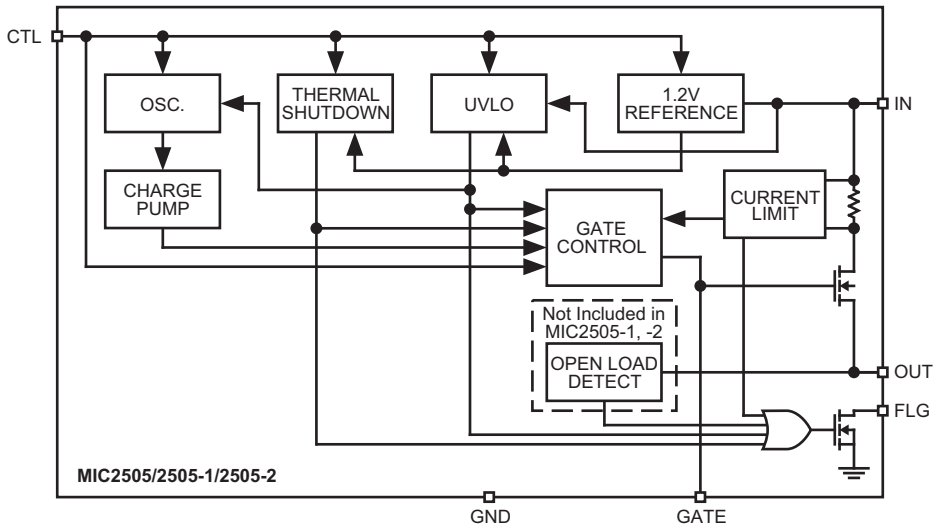

MIC2506 Block Diagram

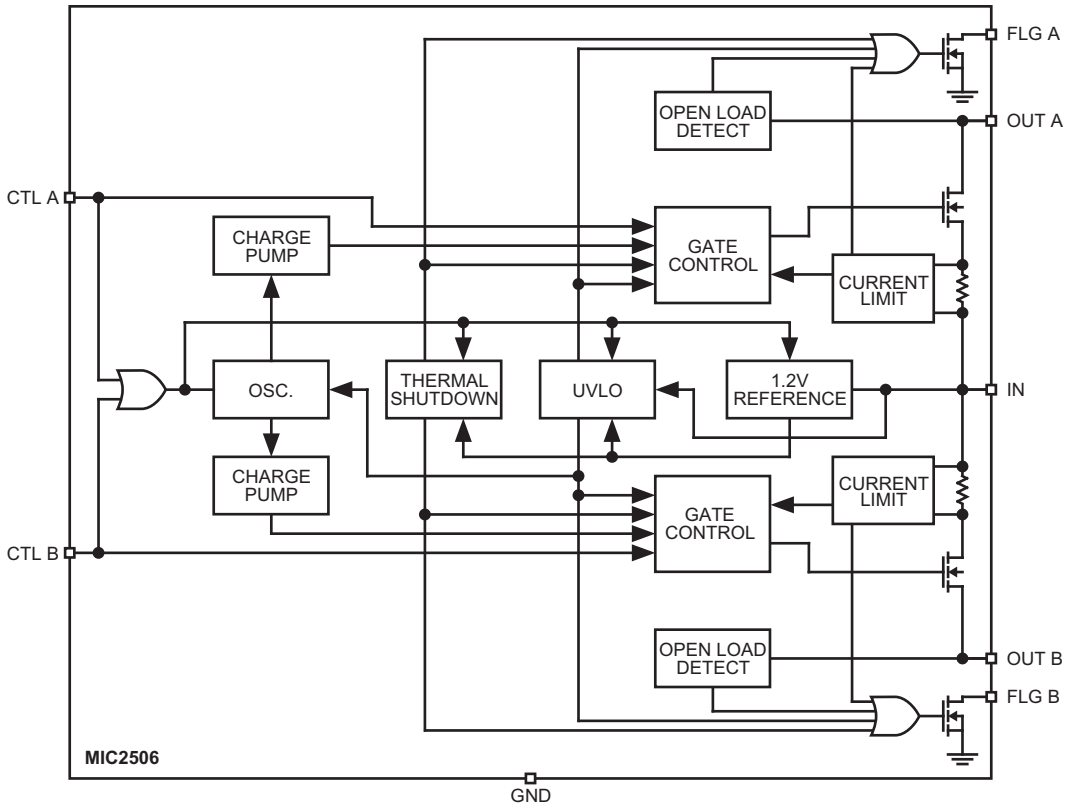

1.0 ELECTRICAL CHARACTERISTICS

Absolute Maximum Ratings †

Supply Voltage (V_{IN}) ..... +8.0V
Fault Flag Voltage (V_{FLG}) ..... +7.5V
Fault Flag Current (I_{FLG}) ..... 50 mA
Output Voltage (V_{OUT}) 7.5V
Output Current (I_{OUT}) ..... Internally Limited
Gate Voltage (V_{GATE}) ..... V_{IN} + 15V
Control Input (V_{CTL}) ..... –0.3V to +15V

Operating Ratings ‡

Supply Voltage (V_{IN}) ..... +3.0V to +7.5V

† **Notice:** Stresses above those listed under “Absolute Maximum Ratings” may cause permanent damage to the device. This is a stress rating only and functional operation of the device at those or any other conditions above those indicated in the operational sections of this specification is not intended. Exposure to maximum rating conditions for extended periods may affect device reliability.

‡ **Notice:** The device is not guaranteed to function outside its operating ratings.

© 2016 Microchip Technology Inc.

TABLE 1-1: ELECTRICAL CHARACTERISTICS

Electrical Characteristics: V_{IN} = +5V, GATE = open, T_A = 25°C, **bold** values are valid for –40°C ≤ T_A ≤ +85°C, unless noted. (**Note 1**).

Parameters	Sym.	Min.	Typ.	Max.	Units	Conditions
Supply Current	I_{DD}	—	0.75	**5**	µA	MIC2505-1, MIC2506, V_{CTL} = logic 0, OUT = open.
		—	110	**160**	µA	MIC2505-1, MIC2506, V_{CTL} = logic 1, OUT = open.
		—	110	**160**	µA	MIC2505-2, V_{CTL} = logic 0, OUT = open.
		—	0.75	**5**	µA	MIC2505-2, V_{CTL} = logic 1, OUT = open.
Control Input Voltage	V_{CTL}	—	2.1	2.4	V	V_{CTL} = logic 0 to logic 1 transition
		0.8	1.9	—	V	V_{CTL} = logic 1 to logic 0 transition
Control Input Current	I_{CTL}	—	0.01	**1**	µA	V_{CTL} = logic 0
		—	0.01	**1**	µA	V_{CTL} = logic 1
Control Input Capacitance	C_{CTL}	—	1	—	pF	—
Output MOSFET Resistance	$R_{DS(ON)}$	—	30	50	mΩ	MIC2505 Series, V_{IN} = 5V, T_A = 25°C.
		—	—	**60**	mΩ	MIC2505 Series, V_{IN} = 5V, –40°C < T_A < +85°C.
		—	35	60	mΩ	MIC2505 Series, V_{IN} = 3.3V, T_A = 25°C.
		—	—	**75**	mΩ	MIC2505 Series, V_{IN} = 3.3V, –40°C < T_A < +85°C.
		—	75	125	mΩ	MIC2506, V_{IN} = 5V, T_A = 25°C.
		—	—	**150**	mΩ	MIC2506, V_{IN} = 5V, –40°C < T_A < +85°C.
		—	80	135	mΩ	MIC2506, V_{IN} = 3.3V, T_A = 25°C.
		—	—	**165**	mΩ	MIC2506, V_{IN} = 3.3V, –40°C < T_A < +85°C.
Output Turn-On Delay	t_{ON}	**200**	850	**2000**	µs	MIC2505 Series, R_L = 10Ω, C_{GATE} = 0.
		100	700	**2000**	µs	MIC2506, R_L = 10Ω each output.
Output Turn-On Rise Time	t_R	**500**	3000	**7500**	µs	MIC2505 Series, R_L = 10Ω, C_{GATE} = 0.
		200	2000	**6000**	µs	MIC2506, R_L = 10Ω each output.

Note 1: Devices are ESD protected; however, handling precautions recommended. All limits guaranteed by testing or statistical analysis.

2: MIC2505-1 and -2 versions have no open load detect feature.

3: Open load threshold is the output voltage (V_{OUT}) where FLG becomes active (low) when CTL is low. OUT is pulled high by a 100 kΩ external resistor to V_{IN}.

TABLE 1-1: ELECTRICAL CHARACTERISTICS (CONTINUED)

Electrical Characteristics: V_{IN} = +5V, GATE = open, T_A = 25°C, **bold** values are valid for –40°C ≤ T_A ≤ +85°C, unless noted. **(Note 1)**.

Parameters	Sym.	Min.	Typ.	Max.	Units	Conditions
Output Turn-Off Delay	t_{OFF}	—	0.7	**20**	µs	MIC2505 Series, R_L = 10Ω, C_{GATE} = 0.
		—	0.8	**20**	µs	MIC2506, R_L = 10Ω each output.
Output Turn-Off Fall Time	t_F	—	1.5	**20**	µs	MIC2505 Series, R_L = 10Ω, C_{GATE} = 0.
		—	0.7	**20**	µs	MIC2506, R_L = 10Ω each output.
Output Leakage Current	I_{LKG}	—	—	**10**	µA	—
Current Limit Threshold	I_{LIM}	**2**	4	—	A	MIC2505 Series
		1	2	3	A	MIC2506
Open Load Threshold (Note 2)	V_{OPENL_TH}	**0.5**	1	**1.5**	V	V_{CTL} = logic low, Note 3
Overtemperature Shutdown Threshold	T_{SD}	—	135	—	°C	T_J increasing
		—	125	—	°C	T_J decreasing
Error Flag Output Resistance	R_{FLG}	—	10	**25**	Ω	V_{IN} = 5V, I_L = 10 mA
		—	15	**40**	Ω	V_{IN} = 3.3V, I_L = 10 mA
Error Flag Off Current	I_{FLG_OFF}	—	0.01	**1**	µA	V_{FLAG} = 5V
UVLO Threshold	V_{UVLO_TH}	**2.2**	2.5	**3.0**	V	V_{IN} increasing
UVLO Hysteresis	$V_{UVLO_TH_HYST}$	—	215	—	mV	MIC2505
		—	235	—	mV	MIC2506

Note 1: Devices are ESD protected; however, handling precautions recommended. All limits guaranteed by testing or statistical analysis.

2: MIC2505-1 and -2 versions have no open load detect feature.

3: Open load threshold is the output voltage (V_{OUT}) where FLG becomes active (low) when CTL is low. OUT is pulled high by a 100 kΩ external resistor to V_{IN}.

© 2016 Microchip Technology Inc.

TEMPERATURE SPECIFICATIONS

Parameters	Sym.	Min.	Typ.	Max.	Units	Conditions
Temperature Ranges						
Ambient Operating Temperature	T_A	–40	—	+85	°C	—
Storage Temperature Range	T_S	–65	—	+150	°C	—
Lead Temperature	—	—	—	+260	°C	Soldering, 5s
Package Thermal Resistances						
Thermal Resistance, SOIC	θ_{JA}	—	160	—	°C/W	—

2.0 TYPICAL PERFORMANCE CURVES

Note: The graphs and tables provided following this note are a statistical summary based on a limited number of samples and are provided for informational purposes only. The performance characteristics listed herein are not tested or guaranteed. In some graphs or tables, the data presented may be outside the specified operating range (e.g., outside specified power supply range) and therefore outside the warranted range.

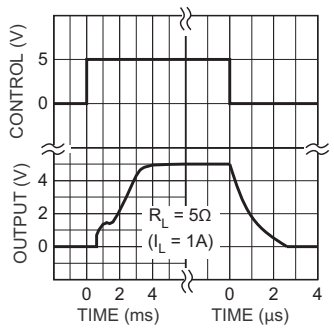

FIGURE 2-1: *MIC2505 Turn-On, Turn-Off Characteristics.*

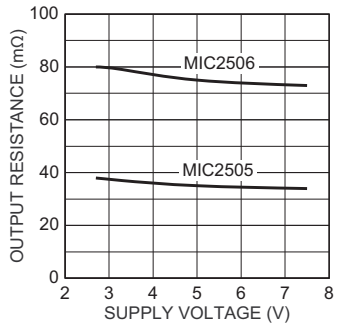

FIGURE 2-2: *Output On Resistance vs. Supply Voltage.*

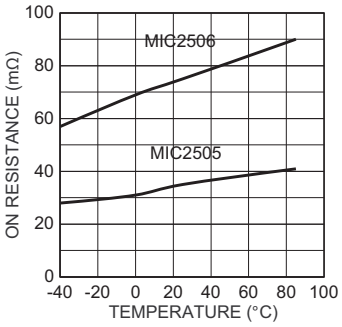

FIGURE 2-3: *Output On Resistance vs. Temperature.*

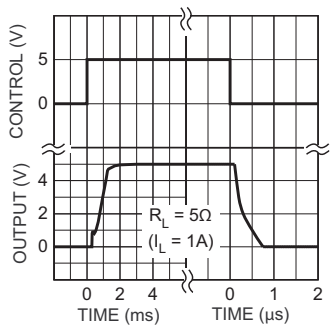

FIGURE 2-4: *MIC2506 Turn-On, Turn-Off Characteristics.*

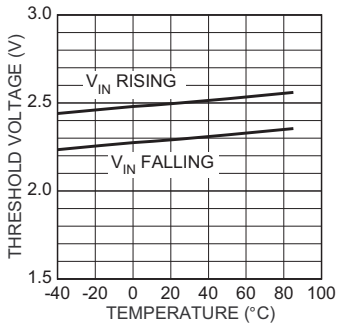

FIGURE 2-5: *UVLO Threshold Voltage vs. Temperature.*

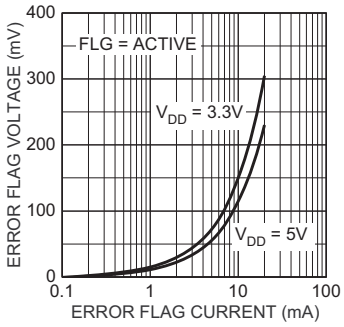

FIGURE 2-6: *Error Flag Voltage vs. Error Flag Current.*

© 2016 Microchip Technology Inc.

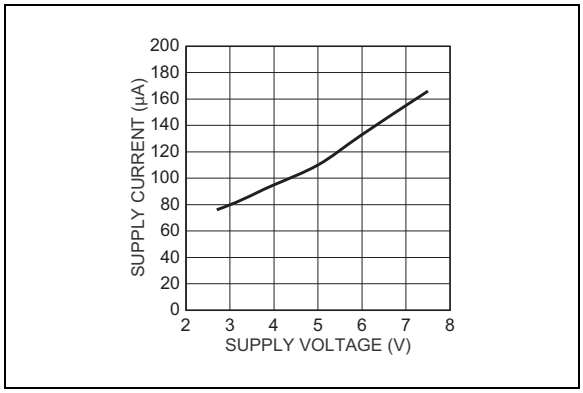

FIGURE 2-7: *On-State Supply Current vs. Supply Voltage.*

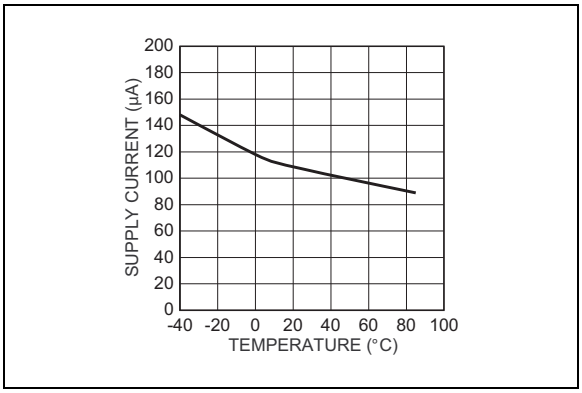

FIGURE 2-10: *On-State Supply Current vs. Temperature.*

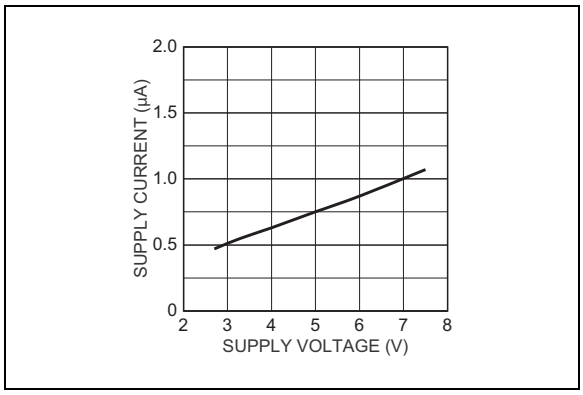

FIGURE 2-8: *Off-State Supply Current vs. Supply Voltage.*

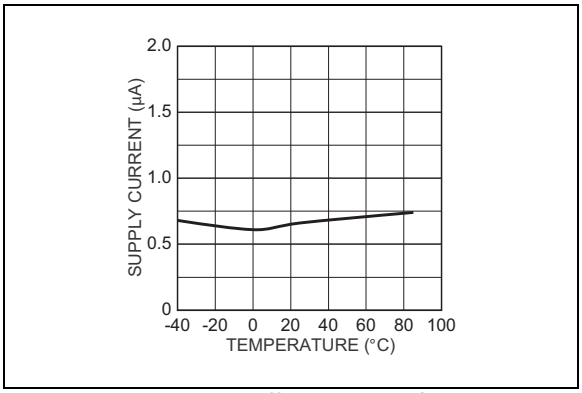

FIGURE 2-11: *Off-State Supply Current vs. Temperature.*

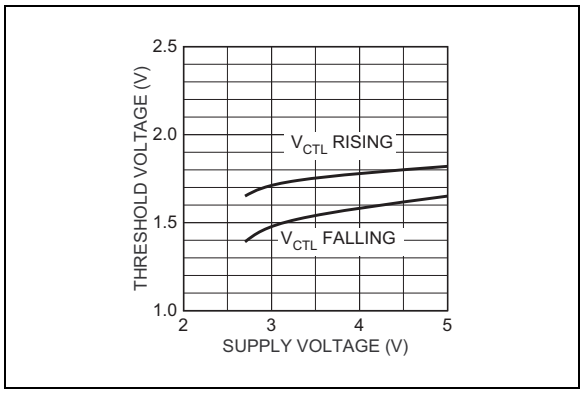

FIGURE 2-9: *Control Threshold vs. Supply Voltage.*

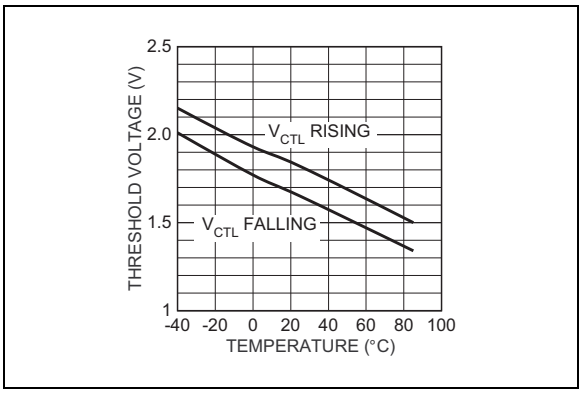

FIGURE 2-12: *Control Threshold vs. Temperature.*

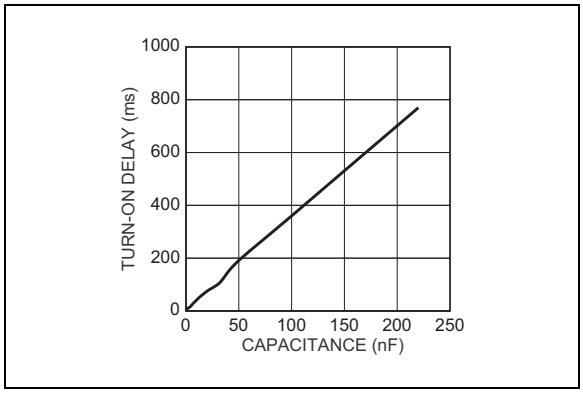

FIGURE 2-13: *MIC2505 Turn-On Delay with External Gate Capacitance.*

3.0 TEST CIRCUITS

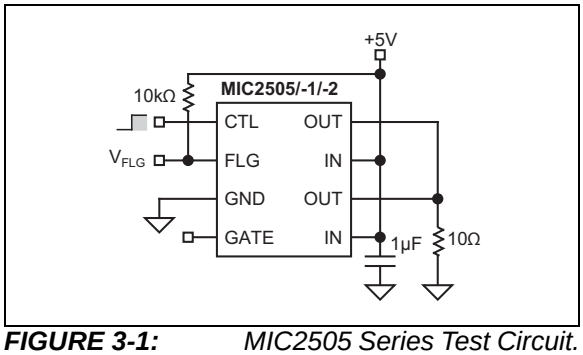

FIGURE 3-1: *MIC2505 Series Test Circuit.*

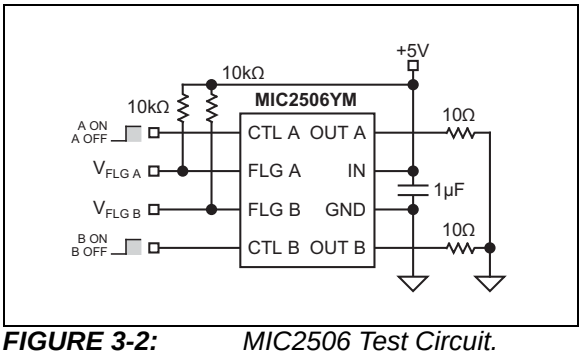

FIGURE 3-2: *MIC2506 Test Circuit.*

© 2016 Microchip Technology Inc.

4.0 PIN DESCRIPTIONS

The descriptions of the pins are listed in Table 4-1.

TABLE 4-1: PIN FUNCTION TABLE

Pin Number MIC2505 Series	Pin Number MIC2506	Pin Name	Description
1	1, 4	CTL (A/B)	Control (Input): TTL-compatible control input. MIC2505, MIC2505-1, and MIC2506 are active-high. MIC2505-2 is active-low.
2	2, 3	FLG (A/B)	Fault Flag (Output): Active-low, open-drain output. If CTL is low, indicates open load. If CTL is high, indicates current limit, thermal shutdown, or UVLO. MIC2505-1 and -2 do not support open-load detect.
3	6	GND	Ground: Return.
4	—	GATE	Output MOSFET Gate: Open for fastest rise time. Connect capacitor to ground to slow rise time. (See Figure 2-13)
5, 7	7	IN	Supply Input: Output MOSFET drain. Also supplies IC's internal circuitry. Connect to supply. MIC2505 series only: Pins 5 and 7 must be externally connected together.
6, 8	8, 5	OUT (A/B)	Switch Output: Output MOSFET source. Typically connect to switched side of load. Output voltage can be pulled above input voltage in off mode. MIC2505 series only: Pins 6 and 8 must be externally connected together.

© 2016 Microchip Technology Inc.

5.0 FUNCTIONAL DESCRIPTION

The MIC2505-series and MIC2506 are high-side N-Channel switches. The MIC2505, MIC2505-1, and MIC2506 have active-high enable inputs. The MIC2505-2 has an active-low input. Fault conditions inhibit output transistor turn-on or turn-off when enabled.

5.1 Control Input

CTL (control input) activates the oscillator, thermal shutdown, UVLO, 1.2V reference, and gate control circuits. If there are no fault conditions, the output MOSFET turns on when enabled.

5.2 Reference

A 1.2V bandgap reference supplies a regulated voltage to the thermal shutdown and undervoltage lockout circuits. The reference is only active when CTL is enabled.

5.3 Oscillator/Charge Pump

The oscillator produces an 80 kHz square wave output that drives the charge pump. The oscillator is enabled when CTL is active.

The charge pump is a voltage quintupler (5x). The charge pump capacitors are self contained.

5.4 Gate Control

The gate control circuit charges the output MOSFET gate from the charge pump output or discharges the MOSFET gate to ground as determined by CTL, thermal shutdown, or undervoltage lockout (UVLO).

An optional, external capacitor may be connected to the MIC2505 GATE to lengthen the rise time. This slows the turn on of the MOSFET output switch. (See Figure 2-13) Because this pin connects directly to the MOSFET gate, use ESD precautions when contacting components connected to this pin. Leakage resistance may increase turn on times.

5.5 Input and Output

IN (input) is the supply connection to the logic circuitry and the drain of the output MOSFET. OUT (output) is the source of the output MOSFET. In a typical circuit, current flows through the switch from IN to OUT toward the load.

The output MOSFET and driver circuitry are also designed to allow the MOSFET source to be externally forced to a higher voltage than the drain ($V_{OUT} > V_{IN}$) when the output switch is off and V_{IN} > UVLO minimum. In this situation, the MIC2505/6 avoids undesirable drain to body diode reverse current flow by grounding the body when the switch is off. The conventional method for optimum turn-on threshold has the source connected to the body. This would allow a large current to flow when $V_{SOURCE} > V_{DRAIN} + 0.6V$.

5.5.1 MIC2505 SERIES ONLY

Duplicate IN and OUT leads are not internally connected. Connect both IN pins to the supply. Connect both OUT leads to the load.

5.6 Thermal Shutdown

Thermal shutdown shuts off the output MOSFET and signals the fault flag if the die temperature exceeds 135°C. 10°C of hysteresis prevents the switch from turning on until the die temperature drops to 125°C.

Overtemperature detection functions only when the control input is enabled (output MOSFET is on). Both MIC2506 outputs are shut off during overtemperature, and both flags will go low.

5.7 Undervoltage Lockout

UVLO (undervoltage lockout) prevents the output MOSFET from turning on until V_{IN} (input voltage) exceeds 2.5V typical. After the switch turns on, if V_{IN} drops below 2.3V typical, UVLO shuts off the output MOSFET and turns the fault flag on (active-low) until V_{IN} drops below 1.5V.

Undervoltage detection functions only when the control input is enabled (output MOSFET is on).

5.8 Overcurrent Limit

The overcurrent limit is preset internally. The preset level prevents damage to the output MOSFET, but allows a minimum current of 2A through the output MOSFET of the MIC2505-series and 1A for each output MOSFET of the MIC2506. Output current is monitored by sensing the voltage drop across the output MOSFET drain metal resistance.

Overcurrent detection functions only when the control input is enabled (output MOSFET is on) and V_{IN} is above the UVLO threshold.

5.9 Open-Load Detection

Open-load detection is available only on the MIC2505 and MIC2506. The open-load detection feature is not included in the MIC2505-1 or -2 versions.

Open-load detection indicates the absence of an output load by activating the fault flag. Open-load detection is optional and is enabled by connecting a high-value pull-up resistor between IN and OUT. If there is no load, the circuit detects a high OUT (output) voltage (typically ≥1V) and signals the fault flag. Under normal conditions, the low resistance of a typical load pulls OUT low. Open-load detection functions only when the control input is low (output MOSFET is off).

© 2016 Microchip Technology Inc.

5.10 Fault Flag

FLG is an N-channel, open-drain MOSFET output. The fault flag is active (low) for one or more of the following conditions: open load (except MIC2505-1 and -2 versions), undervoltage, current limit, or thermal shutdown. The flag output MOSFET is capable of sinking a 10 mA load to typically 100 mV above ground.

6.0 APPLICATION INFORMATION

6.1 Supply Filtering

A 0.1 µF to 1 µF bypass capacitor from IN to GND, located at the device is strongly recommended to control supply transients. Without a bypass capacitor, an output short may cause sufficient ringing on the input (from supply lead inductance) to destroy the internal control circuitry.

Input transients must not exceed the absolute maximum supply voltage ($V_{IN(MAX)}$ = 7.5V) even for a short duration.

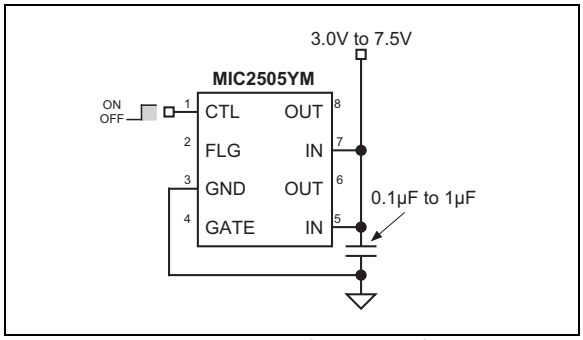

FIGURE 6-1: *Supply Bypassing.*

The bypass capacitor may be omitted only if board design precautions are followed, such as using extremely short supply leads or power and ground planes.

6.2 Control Input

CTL must be driven logic high or logic low, or be pulled high or low for a clearly defined input. Floating the input may cause unpredictable operation. Add a diode clamp if negative spikes may occur. See Figure 6-2.

6.3 Open-Load Detection

Refer to the Typical Application Schematics. Open-load detection is available only on the MIC2505 and MIC2506. For USB power distribution applications, the open-load detection feature is not included in the MIC2505-1 or -2 versions.

The optional open-load detection resistor supplies a small pull-up current to the load when the output switch is off. A 100 kΩ resistor will draw 50 µA from a 5V supply. Normally, the load dominates, pulling OUT low. If the load is absent, the optional resistor pulls OUT high, activating the fault flag if CTL is off.

When a load is switched off with CTL, capacitance on the output may cause the open-load function to pull the flag low until the capacitor is discharged below approximately 2.4V.

Omit the pull-up resistor when open load detection is not required and for minimum off-state supply current.

6.4 Power Bus Switch

The MIC2505/6 family features a MOSFET reverse current flow prevention circuit. This prevents current from flowing backwards (from OUT to IN) when CTL is disabled as long as V_{IN} is above UVLO minimum. In Figure 6-2, when U1 is on and U2 is off, this feature prevents current flow from the load (5V) backward through U2 to the 3.3V supply. If a discrete MOSFET and driver were used, the MOSFET's internal body diode would short the 5V load to the 3.3V supply.

FLG will be active (low) on any switch that is off whenever the load voltage is greater than the open load threshold (approximately 1V) except for MIC2505-1 and MIC2505-2.

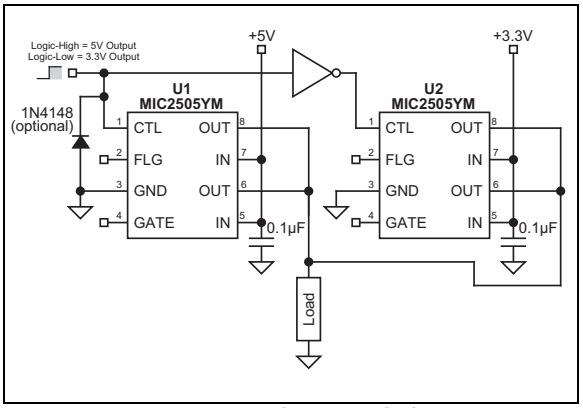

FIGURE 6-2: *5V/3.3V Switch Concept.*

This circuit's function would otherwise require a dual driver, two MOSFETs, plus two diodes (or a dual driver plus four MOSFETs).

6.5 Hot Plug-In Applications (Soft-Start)

The MIC2505/6 family can be used to protect the socket-side and card-side of a supply circuit from transients caused when a capacitive load is connected to an active supply.

The switch presents a high impedance when off, and slowly becomes a low impedance as it turns on. This reduces the inrush current and related voltage drop that result from charging a capacitive load.

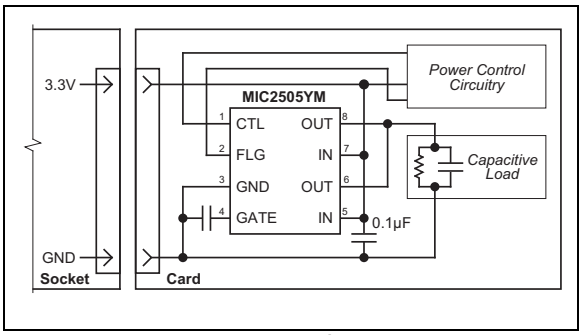

FIGURE 6-3: *Hot Pulg-In Concept.*

© 2016 Microchip Technology Inc.

A gate capacitor may be added to the MIC2505 to slow the turn on time even more, reducing the inrush current. See Figure 2-13. The UVLO feature ensures that each time the card is removed and V_{IN} = 0 that the gate of the output switch is discharged to zero volts. A controlled turn-on is executed each time a board is plugged in, even with multiple insertions.

6.6 USB Application

Figure 6-4 depicts a low cost and robust implementation of a four-port, self-powered USB hub circuit employing ganged overcurrent protection.

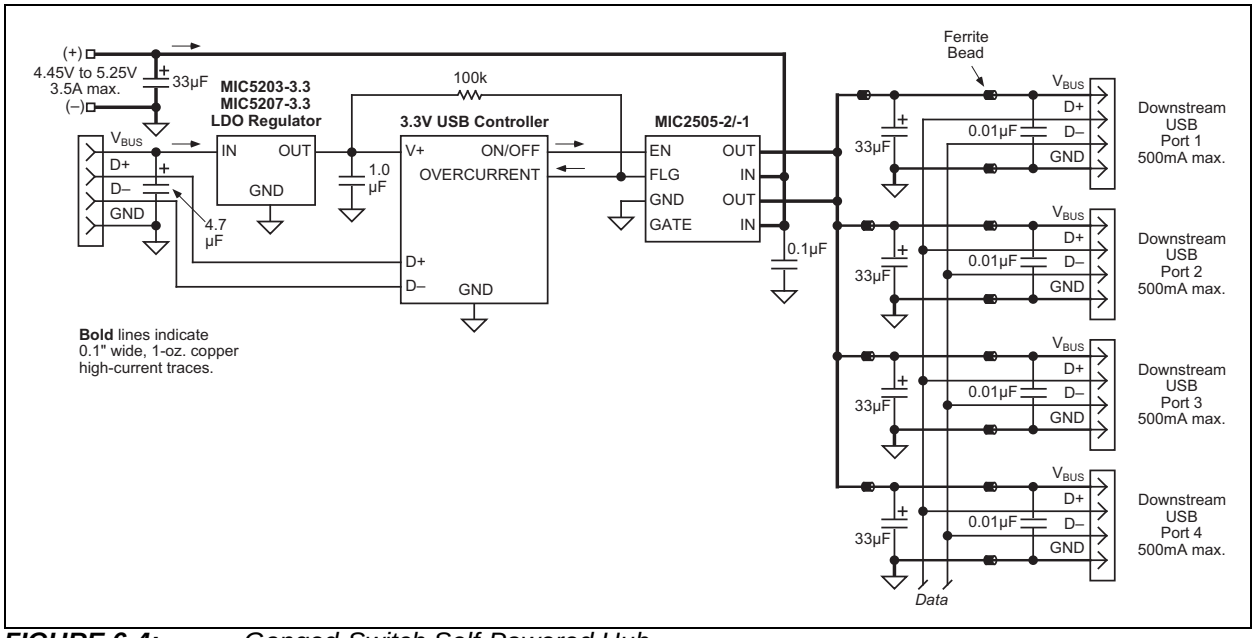

FIGURE 6-4: *Ganged-Switch Self-Powered Hub.*

7.0 PACKAGING INFORMATION

7.1 Package Marking Information

8-Pin SOIC*

for MIC2505	Example
MIC XXXXXX YYWW	MIC 2505YM 1426
for MIC2505-1/-2	**Example**
XXXX -XXX YYWW	2505 -1YM 1532
for MIC2506	**Example**
MIC XXXXXX YYWW	MIC 2506YM 1609

Legend:	XX...X	Product code or customer-specific information
	Y	Year code (last digit of calendar year)
	YY	Year code (last 2 digits of calendar year)
	WW	Week code (week of January 1 is week ‘01’)
	NNN	Alphanumeric traceability code
	e3	Pb-free JEDEC® designator for Matte Tin (Sn)
	*	This package is Pb-free. The Pb-free JEDEC designator (e3) can be found on the outer packaging for this package.
	●, ▲, ▼	Pin one index is identified by a dot, delta up, or delta down (triangle mark).

Note: In the event the full Microchip part number cannot be marked on one line, it will be carried over to the next line, thus limiting the number of available characters for customer-specific information. Package may or may not include the corporate logo.

Underbar (_) symbol may not be to scale.

© 2016 Microchip Technology Inc.

8-Lead SOIC Package Outline and Recommended Land Pattern

Note: For the most current package drawings, please see the Microchip Packaging Specification located at http://www.microchip.com/packaging

TITLE
8 LEAD SOICN PACKAGE OUTLINE & RECOMMENDED LAND PATTERN

DRAWING #	SOICN-8LD-PL-1	UNIT	INCH [MM]

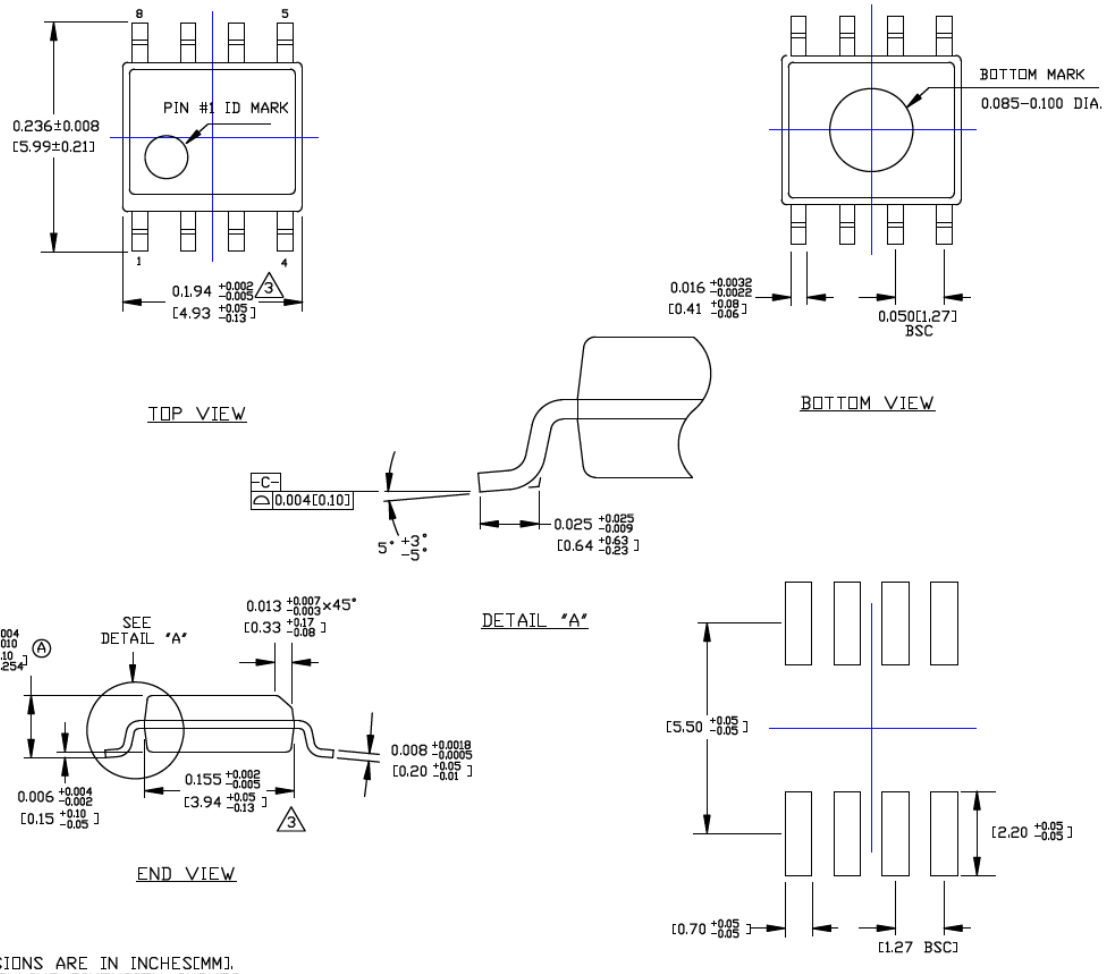

NOTES:
1. DIMENSIONS ARE IN INCHES[MM].
2. CONTROLLING DIMENSION: INCHES.
3. DIMENSION DOES NOT INCLUDE MOLD FLASH OR PROTRUSIONS, EITHER OF WHICH SHALL NOT EXCEED 0.010[0.25] PER SIDE.

NOTES:

© 2016 Microchip Technology Inc.

APPENDIX A: REVISION HISTORY

Revision A (August 2016)

- Converted Micrel document MIC2505/6 to Microchip data sheet DS20005579A.
- Minor text changes throughout.

NOTES:

© 2016 Microchip Technology Inc.

PRODUCT IDENTIFICATION SYSTEM

To order or obtain information, e.g., on pricing or delivery, contact your local Microchip representative or sales office.

PART NO.	–	X	X	X	–	X
Device		Control/ Enable and Open-Load Detect	Temperature	Package		Media Type

Device:	MIC2505:		Single 2A High-Side Switch
	MIC2506:		Dual 1A High-Side Switch, (Note 1)
Control/Enable and Open-Load Detect:	Blank	=	Active-High with Open-Load Detect
	1	=	Active-High without Open-Load Detect
	2	=	Active-Low without Open-Load Detect
Temperature:	Y	=	–40°C to +85°C
Package:	M	=	8-Pin SOIC
Media Type:	TR	=	2,500/Reel
	none	=	95/Tube

Note 1: MIC2506 is only available in an Active-High with Open-Load Detect configuration.

Examples:

a)	MIC2505YM:	Single 2A High-Side Switch, Active-High with Open-Load Detect, –40°C to +85°C Temp. Range, 8-Pin SOIC, 95/Tube
b)	MIC2505YM-TR:	Single 2A High-Side Switch, Active-High with Open-Load Detect, –40°C to +85°C Temp. Range, 8-Pin SOIC, 2,500/Reel
c)	MIC2505-1YM:	Single 2A High-Side Switch, Active-High without Open-Load Detect, –40°C to +85°C Temp. Range, 8-Pin SOIC, 95/Tube
d)	MIC2505-1YM-TR:	Single 2A High-Side Switch, Active-High without Open-Load Detect, –40°C to +85°C Temp. Range, 8-Pin SOIC, 2,500/Reel
e)	MIC2505-2YM:	Single 2A High-Side Switch, Active-Low without Open-Load Detect, –40°C to +85°C Temp. Range, 8-Pin SOIC, 95/Tube
f)	MIC2505-2YM-TR:	Single 2A High-Side Switch, Active-Low without Open-Load Detect, –40°C to +85°C Temp. Range, 8-Pin SOIC, 2,500/Reel
g)	MIC2506YM:	Dual 1A High-Side Switch, Active-High with Open-Load Detect, –40°C to +85°C Temp. Range, 8-Pin SOIC, 95/Tube
h)	MIC2506YM-TR:	Dual 1A High-Side Switch, Active-High with Open-Load Detect, –40°C to +85°C Temp. Range, 8-Pin SOIC, 2,500/Reel

© 2016 Microchip Technology Inc.

NOTES:

© 2016 Microchip Technology Inc.

Note the following details of the code protection feature on Microchip devices:

- Microchip products meet the specification contained in their particular Microchip Data Sheet.
- Microchip believes that its family of products is one of the most secure families of its kind on the market today, when used in the intended manner and under normal conditions.
- There are dishonest and possibly illegal methods used to breach the code protection feature. All of these methods, to our knowledge, require using the Microchip products in a manner outside the operating specifications contained in Microchip's Data Sheets. Most likely, the person doing so is engaged in theft of intellectual property.
- Microchip is willing to work with the customer who is concerned about the integrity of their code.
- Neither Microchip nor any other semiconductor manufacturer can guarantee the security of their code. Code protection does not mean that we are guaranteeing the product as "unbreakable."

Code protection is constantly evolving. We at Microchip are committed to continuously improving the code protection features of our products. Attempts to break Microchip's code protection feature may be a violation of the Digital Millennium Copyright Act. If such acts allow unauthorized access to your software or other copyrighted work, you may have a right to sue for relief under that Act.

Information contained in this publication regarding device applications and the like is provided only for your convenience and may be superseded by updates. It is your responsibility to ensure that your application meets with your specifications. MICROCHIP MAKES NO REPRESENTATIONS OR WARRANTIES OF ANY KIND WHETHER EXPRESS OR IMPLIED, WRITTEN OR ORAL, STATUTORY OR OTHERWISE, RELATED TO THE INFORMATION, INCLUDING BUT NOT LIMITED TO ITS CONDITION, QUALITY, PERFORMANCE, MERCHANTABILITY OR FITNESS FOR PURPOSE**.** Microchip disclaims all liability arising from this information and its use. Use of Microchip devices in life support and/or safety applications is entirely at the buyer's risk, and the buyer agrees to defend, indemnify and hold harmless Microchip from any and all damages, claims, suits, or expenses resulting from such use. No licenses are conveyed, implicitly or otherwise, under any Microchip intellectual property rights unless otherwise stated.

Microchip received ISO/TS-16949:2009 certification for its worldwide headquarters, design and wafer fabrication facilities in Chandler and Tempe, Arizona; Gresham, Oregon and design centers in California and India. The Company's quality system processes and procedures are for its PIC® MCUs and dsPIC® DSCs, KEELOQ® code hopping devices, Serial EEPROMs, microperipherals, nonvolatile memory and analog products. In addition, Microchip's quality system for the design and manufacture of development systems is ISO 9001:2000 certified.

QUALITY MANAGEMENT SYSTEM
CERTIFIED BY DNV
═ ISO/TS 16949 ═

Trademarks

The Microchip name and logo, the Microchip logo, AnyRate, dsPIC, FlashFlex, flexPWR, Heldo, JukeBlox, KeeLoq, KeeLoq logo, Kleer, LANCheck, LINK MD, MediaLB, MOST, MOST logo, MPLAB, OptoLyzer, PIC, PICSTART, PIC32 logo, RightTouch, SpyNIC, SST, SST Logo, SuperFlash and UNI/O are registered trademarks of Microchip Technology Incorporated in the U.S.A. and other countries.

ClockWorks, The Embedded Control Solutions Company, ETHERSYNCH, Hyper Speed Control, HyperLight Load, IntelliMOS, mTouch, Precision Edge, and QUIET-WIRE are registered trademarks of Microchip Technology Incorporated in the U.S.A.

Analog-for-the-Digital Age, Any Capacitor, AnyIn, AnyOut, BodyCom, chipKIT, chipKIT logo, CodeGuard, dsPICDEM, dsPICDEM.net, Dynamic Average Matching, DAM, ECAN, EtherGREEN, In-Circuit Serial Programming, ICSP, Inter-Chip Connectivity, JitterBlocker, KleerNet, KleerNet logo, MiWi, motorBench, MPASM, MPF, MPLAB Certified logo, MPLIB, MPLINK, MultiTRAK, NetDetach, Omniscient Code Generation, PICDEM, PICDEM.net, PICkit, PICtail, PureSilicon, RightTouch logo, REAL ICE, Ripple Blocker, Serial Quad I/O, SQI, SuperSwitcher, SuperSwitcher II, Total Endurance, TSHARC, USBCheck, VariSense, ViewSpan, WiperLock, Wireless DNA, and ZENA are trademarks of Microchip Technology Incorporated in the U.S.A. and other countries.

SQTP is a service mark of Microchip Technology Incorporated in the U.S.A.

Silicon Storage Technology is a registered trademark of Microchip Technology Inc. in other countries.

GestIC is a registered trademarks of Microchip Technology Germany II GmbH & Co. KG, a subsidiary of Microchip Technology Inc., in other countries.

All other trademarks mentioned herein are property of their respective companies.

© 2016, Microchip Technology Incorporated, Printed in the U.S.A., All Rights Reserved.

ISBN: 978-1-5224-0854-3

Worldwide Sales and Service

AMERICAS

Corporate Office
2355 West Chandler Blvd.
Chandler, AZ 85224-6199
Tel: 480-792-7200
Fax: 480-792-7277
Technical Support:
http://www.microchip.com/support
Web Address:
www.microchip.com

Atlanta
Duluth, GA
Tel: 678-957-9614
Fax: 678-957-1455

Austin, TX
Tel: 512-257-3370

Boston
Westborough, MA
Tel: 774-760-0087
Fax: 774-760-0088

Chicago
Itasca, IL
Tel: 630-285-0071
Fax: 630-285-0075

Cleveland
Independence, OH
Tel: 216-447-0464
Fax: 216-447-0643

Dallas
Addison, TX
Tel: 972-818-7423
Fax: 972-818-2924

Detroit
Novi, MI
Tel: 248-848-4000

Houston, TX
Tel: 281-894-5983

Indianapolis
Noblesville, IN
Tel: 317-773-8323
Fax: 317-773-5453

Los Angeles
Mission Viejo, CA
Tel: 949-462-9523
Fax: 949-462-9608

New York, NY
Tel: 631-435-6000

San Jose, CA
Tel: 408-735-9110

Canada - Toronto
Tel: 905-695-1980
Fax: 905-695-2078

ASIA/PACIFIC

Asia Pacific Office
Suites 3707-14, 37th Floor
Tower 6, The Gateway
Harbour City, Kowloon

Hong Kong
Tel: 852-2943-5100
Fax: 852-2401-3431

Australia - Sydney
Tel: 61-2-9868-6733
Fax: 61-2-9868-6755

China - Beijing
Tel: 86-10-8569-7000
Fax: 86-10-8528-2104

China - Chengdu
Tel: 86-28-8665-5511
Fax: 86-28-8665-7889

China - Chongqing
Tel: 86-23-8980-9588
Fax: 86-23-8980-9500

China - Dongguan
Tel: 86-769-8702-9880

China - Guangzhou
Tel: 86-20-8755-8029

China - Hangzhou
Tel: 86-571-8792-8115
Fax: 86-571-8792-8116

China - Hong Kong SAR
Tel: 852-2943-5100
Fax: 852-2401-3431

China - Nanjing
Tel: 86-25-8473-2460
Fax: 86-25-8473-2470

China - Qingdao
Tel: 86-532-8502-7355
Fax: 86-532-8502-7205

China - Shanghai
Tel: 86-21-5407-5533
Fax: 86-21-5407-5066

China - Shenyang
Tel: 86-24-2334-2829
Fax: 86-24-2334-2393

China - Shenzhen
Tel: 86-755-8864-2200
Fax: 86-755-8203-1760

China - Wuhan
Tel: 86-27-5980-5300
Fax: 86-27-5980-5118

China - Xian
Tel: 86-29-8833-7252
Fax: 86-29-8833-7256

ASIA/PACIFIC

China - Xiamen
Tel: 86-592-2388138
Fax: 86-592-2388130

China - Zhuhai
Tel: 86-756-3210040
Fax: 86-756-3210049

India - Bangalore
Tel: 91-80-3090-4444
Fax: 91-80-3090-4123

India - New Delhi
Tel: 91-11-4160-8631
Fax: 91-11-4160-8632

India - Pune
Tel: 91-20-3019-1500

Japan - Osaka
Tel: 81-6-6152-7160
Fax: 81-6-6152-9310

Japan - Tokyo
Tel: 81-3-6880- 3770
Fax: 81-3-6880-3771

Korea - Daegu
Tel: 82-53-744-4301
Fax: 82-53-744-4302

Korea - Seoul
Tel: 82-2-554-7200
Fax: 82-2-558-5932 or
82-2-558-5934

Malaysia - Kuala Lumpur
Tel: 60-3-6201-9857
Fax: 60-3-6201-9859

Malaysia - Penang
Tel: 60-4-227-8870
Fax: 60-4-227-4068

Philippines - Manila
Tel: 63-2-634-9065
Fax: 63-2-634-9069

Singapore
Tel: 65-6334-8870
Fax: 65-6334-8850

Taiwan - Hsin Chu
Tel: 886-3-5778-366
Fax: 886-3-5770-955

Taiwan - Kaohsiung
Tel: 886-7-213-7828

Taiwan - Taipei
Tel: 886-2-2508-8600
Fax: 886-2-2508-0102

Thailand - Bangkok
Tel: 66-2-694-1351
Fax: 66-2-694-1350

EUROPE

Austria - Wels
Tel: 43-7242-2244-39
Fax: 43-7242-2244-393

Denmark - Copenhagen
Tel: 45-4450-2828
Fax: 45-4485-2829

France - Paris
Tel: 33-1-69-53-63-20
Fax: 33-1-69-30-90-79

Germany - Dusseldorf
Tel: 49-2129-3766400

Germany - Karlsruhe
Tel: 49-721-625370

Germany - Munich
Tel: 49-89-627-144-0
Fax: 49-89-627-144-44

Italy - Milan
Tel: 39-0331-742611
Fax: 39-0331-466781

Italy - Venice
Tel: 39-049-7625286

Netherlands - Drunen
Tel: 31-416-690399
Fax: 31-416-690340

Poland - Warsaw
Tel: 48-22-3325737

Spain - Madrid
Tel: 34-91-708-08-90
Fax: 34-91-708-08-91

Sweden - Stockholm
Tel: 46-8-5090-4654

UK - Wokingham
Tel: 44-118-921-5800
Fax: 44-118-921-5820

06/23/16

© 2016 Microchip Technology Inc.