NOTES:

1. MATERIALS AND FINISHES:
   BODY - BRASS, GOLD PLATING [.000004 IN THICK] OVER HIGH PHOSPHORUS ELETROLESS NICKEL
   CONTACT - BERYLLIUM COPPER, GOLD PLATING [.000004 IN THICK] OVER HIGH PHOSPHORUS ELETROLESS NICKEL
   INSULATOR - PEEK

2. ELECTRICAL:
   A. IMPEDANCE: 50 OHM
   B. FREQUENCY RANGE: DC - 26.5 GHz

3. PHYSICAL:
   A. DURABILITY: 500 CYCLES MIN.
   B. ENGAGEMENT FORCE: 10 LBS [45 N] MAX
   C. DISENGAGEMENT FORCE: 2 LBS [9 N] MIN
   D. INNER CONTACT RETENTION FORCE: 1.5 LB [7 N] MIN
   E. TEMPERATURE RANGE: -65° C TO 165° C

THIRD ANGLE PROJ.

REVISIONS				
REV	DESCRIPTION	DATE	ECO	APPR
A	RELEASE TO MFG	12-Apr-12	49025	TD

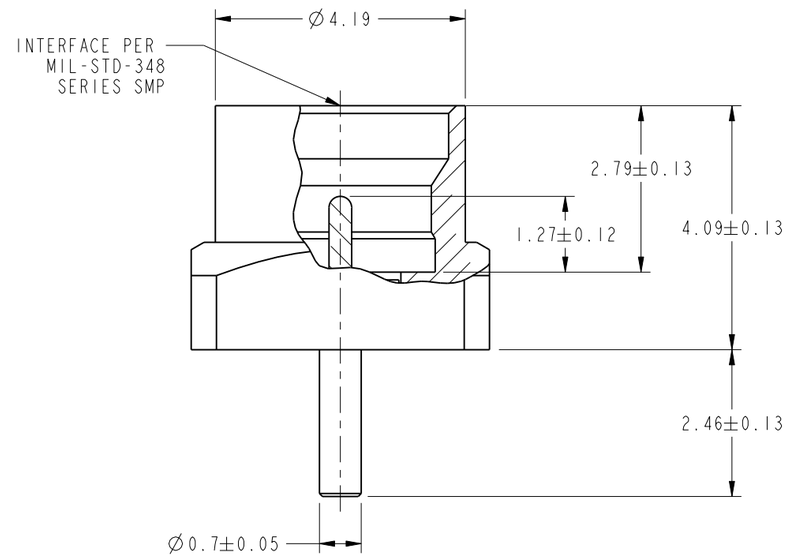

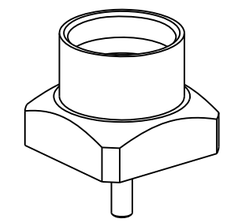

SCALE 5.000

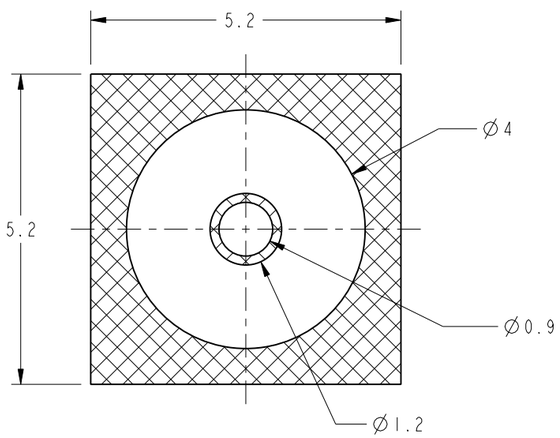

SCALE 10.000
RECOMMENED PCB FOOTPRINT
THRU HOLE DESIGN

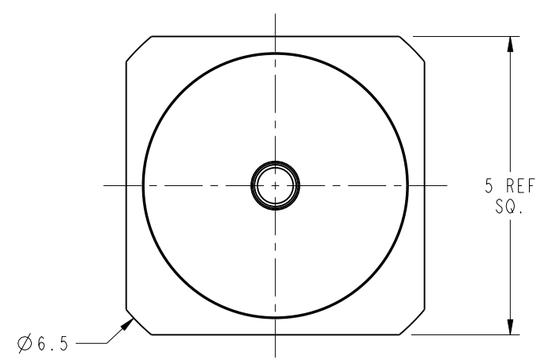

CUSTOMER OUTLINE DRAWING
ALL OTHER SHEETS ARE FOR INTERNAL USE ONLY

UNLESS OTHERWISE SPECIFIED, DIMENSIONS ARE IN METRIC AND TOLERANCES ARE:

<0.5mm	0.5 - 6mm	6 - 30mm	30 - 120mm	ANGLES
± 0.05mm	±0.1mm	±0.2mm	± 0.3mm	±1°

NOTICE - These drawings, specifications, or other data (1) are, and remain the property of Amphenol corp. (2) must be returned upon requiest; and (3) arre confidential and not to be disclosed to any person other than those to whom they are given by Amphenol Corp. the funishing of these drawings, specifications, or other data by Amphenol Corp., or to any other person to anyone for any purpose is not to be regarded by implicatioin or otherwise in any manner licensing, granting rights to permitting such holder or any other sperson to manufacture, use or sell any product, process or design, patented or otherwsie, that may in any way be related to or disclosed by said drawings, specifications, or other data.

MATERIAL

REFERENCE
EAR# 4473

CONFIGURATION LEVEL:

FINISH

DRAWN T.DENG	DATE 12-Apr-12		
ENGINEER T. COVERSTONE	DATE 02-Sep-09		
APPROVED 13-Apr-12	DATE 13-Apr-12		
CAD FILE			

TITLE
SMP JACK, PIN CONTACT
PCB RECEPTACLE
LIMITED DETENT

SCALE: 10.0:1.0 | SHEET 2 OF 2

DWG SIZE B | REV A

Amphenol RF
www.amphenolrf.com

DRAWING NO. SMP-MSLD-PCT-10
ITEM NO. SMP-MSLD-PCT-10
PART NO. SMP-MSLD-PCT-10