THIS DRAWING IS UNPUBLISHED. RELEASED FOR PUBLICATION 20
© COPYRIGHT 20 BY TYCO ELECTRONICS CORPORATION. ALL RIGHTS RESERVED.

LOC	DIST
J	-

REVISIONS

P	LTR	DESCRIPTION	DATE	DWN	APVD
	0	RELEASED FJC0-0193-04	13-Jul-04	J.K	S.Y

-1: AS SHOWN (本図)

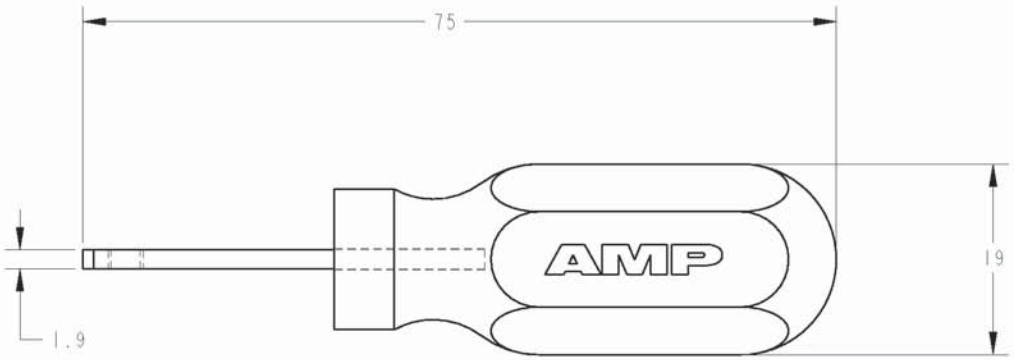

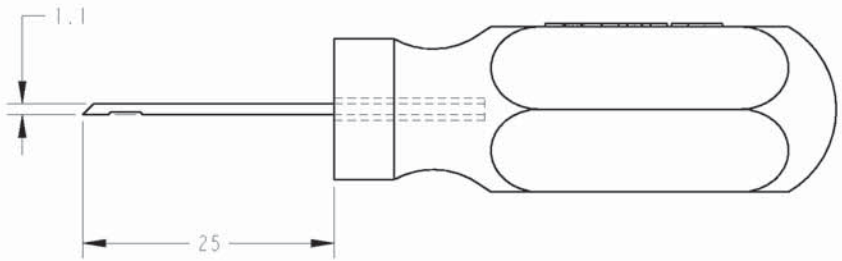

1 APPLICABLE PRODUCTS 適用製品

TERMINAL(STRIP) : 1717148-1
: 1318329-1
: 1612776-1
: 1318332-1
: 1612775-1

PLUG HOUSING : 1717138-4
: 1717138-5
: 1717138-6

2 INSTRUCTION SHEET NO: 411-78158
取扱説明書番号

THIS DRAWING IS A CONTROLLED DOCUMENT FOR TYCO ELECTRONICS CORPORATION IT IS SUBJECT TO CHANGE AND THE CONTROLLING ENGINEERING ORGANIZATION SHOULD BE CONTACTED FOR THE LATEST REVISION.

DIMENSIONS: mm

TOLERANCES UNLESS OTHERWISE SPECIFIED:
0 PLC ±-
1 PLC ±-
2 PLC ±-
3 PLC ±-
4 PLC ±-
ANGLES ±-

MATERIAL

FINISH

DWN J.KOGA 13-Jul-04
CHK J.KOGA 13-Jul-04
APVD S.YABE 13-Jul-04
PRODUCT SPEC -
APPLICATION SPEC -
WEIGHT -

CUSTOMER DRAWING

tyco Electronics
Tyco Electronics AMP K.K.
Kawasaki, Japan

NAME EXT-TOOL,025/040 CLEAN BODY CONN
025/040クリーンボディコネクタ用引抜工具

SIZE	CAGE CODE	DRAWING NO	RESTRICTED TO
A3	00779	C-1729919	-

SCALE 2:1 SHEET 1 OF 1 REV 0

AMP 1470-19 REV 31MAR2000

Pro/ENGINEER DRAWING