THIS DRAWING IS UNPUBLISHED. RELEASED FOR PUBLICATION -,- .
© COPYRIGHT - By - ALL RIGHTS RESERVED.

LOC	DIST
AF	50

REVISIONS

P	LTR	DESCRIPTION	DATE	DWN	APVD
	R	REVISED PER ECR-12-013445	09NOV12	KH	PD

1 CONTINUOUS STRIP ON REELS

2 AMP* FOR 42236-2 ONLY, ALL OTHERS JUST AMP.

3 OBSOLETE PARTS: OBSOLETE CIS STREAMLINING PER D.RENAUD/D.SINISI

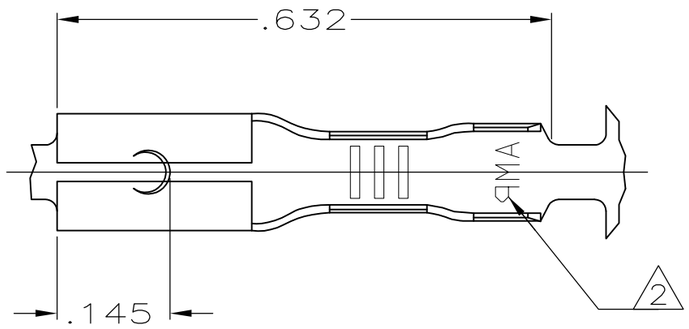

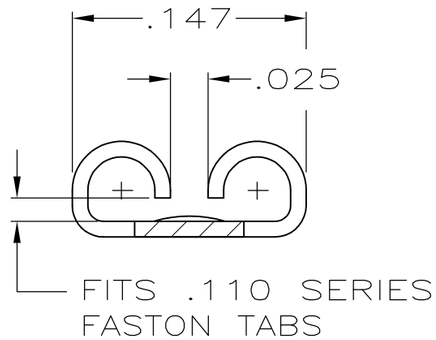

VIEW Z-Z
SCALE 10:1

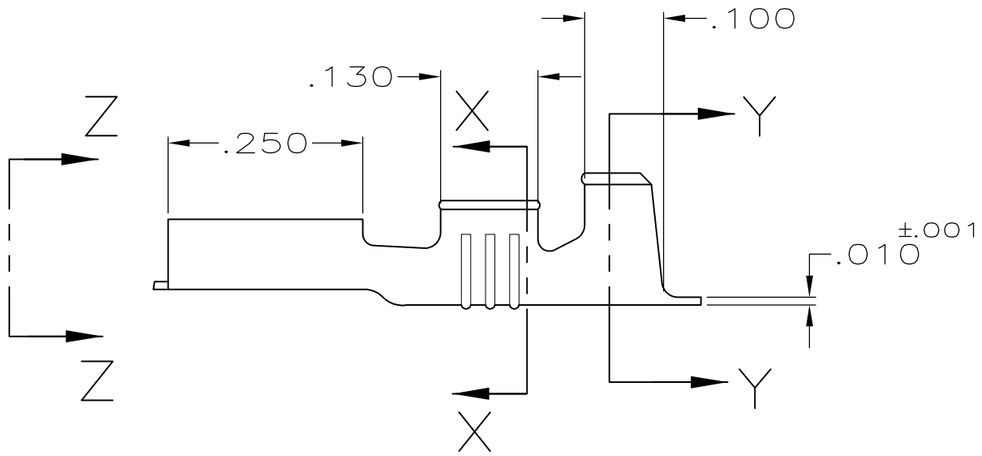

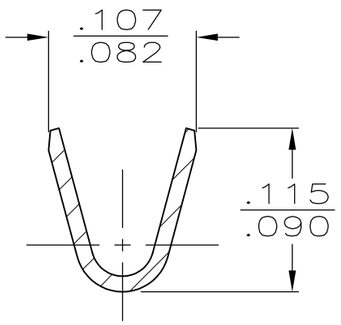

SECTION X-X
SCALE 10:1

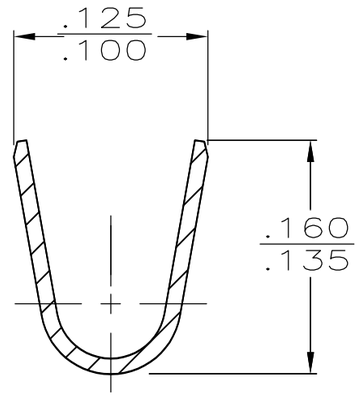

SECTION Y-Y
SCALE 10:1

	MATERIAL	FINISH	INSUL RANGE	WIRE SIZE	MATING TAB THK ±.001	PART NO.
3 OBSOLETE	T3 PHOS BRZ	TIN	.060-.100	22-20 AWG	.020	42236-2
	BRASS	PRE-TIN				42236-1

THIS DRAWING IS A CONTROLLED DOCUMENT.

DIMENSIONS: INCHES

TOLERANCES UNLESS OTHERWISE SPECIFIED:
0 PLC ± -
1 PLC ± -
2 PLC ± -
3 PLC ± .015
4 PLC ± -
ANGLES ± -

MATERIAL: SEE TABLE
FINISH: SEE TABLE

DWN JR RUTH 1/2/91
CHK MS FEHER 1/2/91
APVD C MEYERS 1/2/91
PRODUCT SPEC —
APPLICATION SPEC —
WEIGHT —

TE Connectivity

NAME: RECEPTACLE, FASTON, .110 SERIES

SIZE	CAGE CODE	DRAWING NO	RESTRICTED TO
A3	00779	C-42236	—

CUSTOMER DRAWING | SCALE 5:1 | SHEET 1 OF 1 | REV R