MATERIAL NUMBER	ALTERNATE NUMBER	Ø"S"	PACKAGING
191930143	D-350-06	.146	LOOSE PIECE
191930146	D-350-08	.173	
191930149	D-350-10	.198	
191930152	D-350-14	.265	
191930157	D-350-56	.328	
191930145	D-350-06T	.146	TAPE PARTS
191930148	D-350-08T	.173	
191930151	D-350-10T	.198	
191930155	D-350-14T	.265	
191930158	D-350-56T	.328	
191930156	D-350-14TD	.265	DBL SPCD TAPE PART

B1

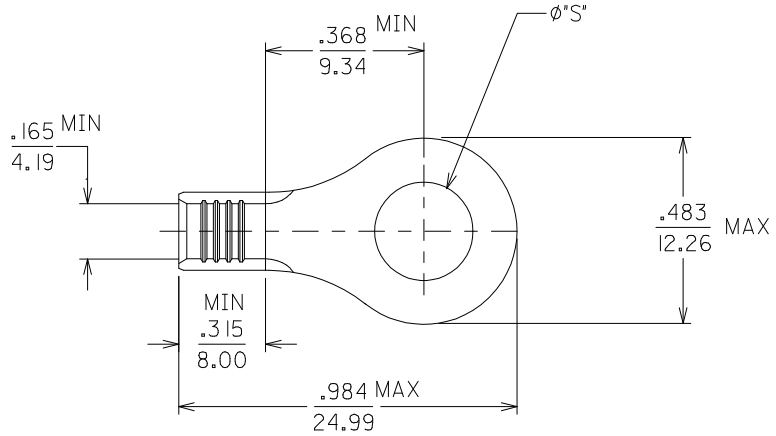

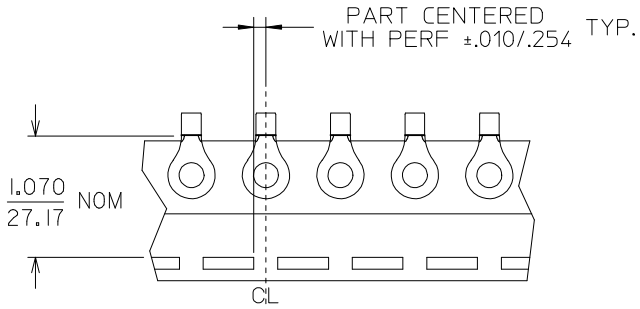

PARTS ON TAPE

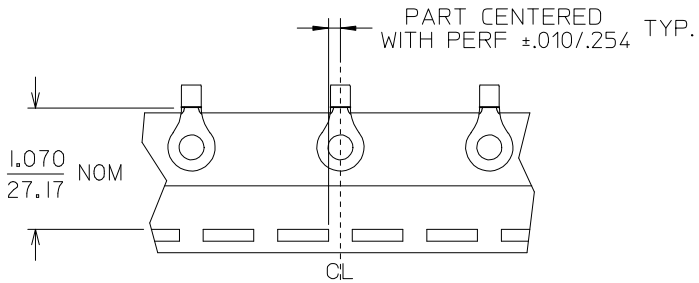

DOUBLE SPACED PARTS ON TAPE

B1

1. MATERIAL: TERMINAL:COPPER
   .045/1.14 THICK REF.
   PLATING: ELECTRO TIN
2. ALL DIMENSIONS = INCHES / MM
3. PART IS ROHS COMPLIANT.

ADD PART NUMBER
EC NO: IPG2014-1374
DRWN:GROJAS01 2014/01/31
CHKD:JMANNEIL 2014/01/31
APPR:JMACNEIL 2014/02/07
DESCRIPTION
B1
REV

QUALITY SYMBOLS
▼=0
Ⓒ=0

GENERAL TOLERANCES (UNLESS SPECIFIED)	mm	INCH
4 PLACES	± ---	± ---
3 PLACES	± ---	± .005
2 PLACES	± 0.13	± .01
1 PLACE	± 0.25	± ---
0 PLACE	±	±

ANGULAR ±1/2°
DRAFT WHERE APPLICABLE MUST REMAIN WITHIN DIMENSIONS

DIMENSION STYLE: IN/MM
SCALE: 4:1
DESIGN UNITS: INCH
THIRD ANGLE PROJECTION

		DATE
DRAWN BY	EDB	2001/01/23
CHECKED BY	HEB	2001/01/23
APPROVED BY		2001/01/23

TITLE: RING TONGUE TERMINAL, 8 AWG

molex

MATERIAL NO.: SEE CHART
DOCUMENT NO.: SD-19193-016
SHEET NO.: 1 OF 1
SIZE: B

THIS DRAWING CONTAINS INFORMATION THAT IS PROPRIETARY TO MOLEX INCORPORATED AND SHOULD NOT BE USED WITHOUT WRITTEN PERMISSION