THIS DRAWING IS UNPUBLISHED. RELEASED FOR PUBLICATION -,- .
© COPYRIGHT - By - ALL RIGHTS RESERVED.

LOC	DIST
GP	00

REVISIONS

P	LTR	DESCRIPTION	DATE	DWN	APVD
	H	REVISED PER ECO-12-011613	11JUL2012	CJV	SLB

1. HOUSING: GLASS FILLED NYLON OR POLYESTER, 94V-0 RATED, COLOR SEE TABLE. POSTS: PHOSPHOR BRONZE.
2. POSTS: GOLD FLASH OVER PALLADIUM-NICKEL PLATE, 0.76µm[.000030] MIN TOTAL ON THE LOCALIZED PLATE AREA, 2.54µm[.000100] MIN TIN PLATE ON THE TAIL, 1.27µm[.000050] MIN NICKEL UNDERPLATE ON THE ENTIRE POST.
   -OR-
   0.76µm[.000030] MIN GOLD PLATE ON THE LOCALIZED PLATE AREA, 2.54µm[.000100] MIN TIN PLATE ON THE TAIL, 1.27µm[.000050] MIN NICKEL UNDERPLATE ON THE ENTIRE POST.
3. REFER TO APPLICATION SPECIFICATION 114-40020 FOR HOLE SIZE AND FINISH RECOMMENDATIONS.
4. DATUMS M & N TO BE ESTABLISHED BY CUSTOMER.
5. NO SLOT FOR SNAP-IN POLARIZER ON THIS END FOR 10 AND 14 POSITION HEADERS.
6. NO SLOT ON THIS END FOR 10 POSITION HEADERS.

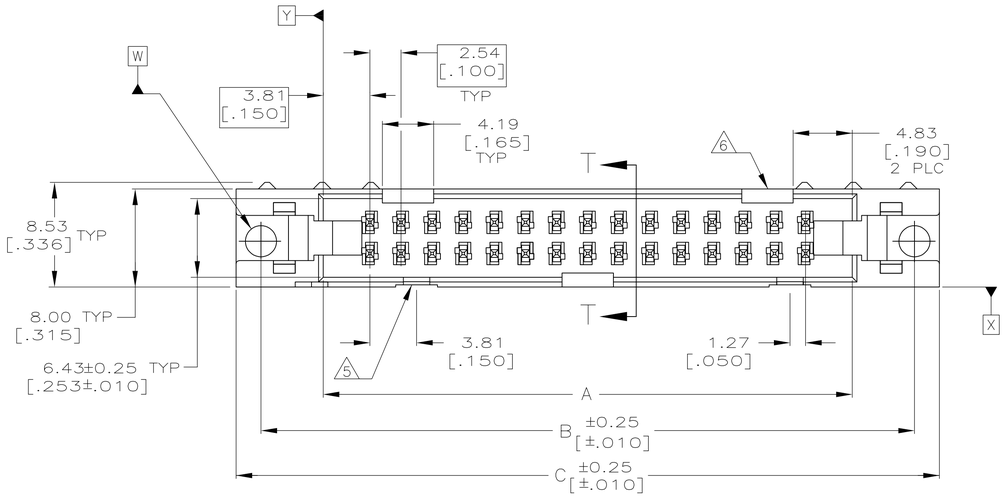

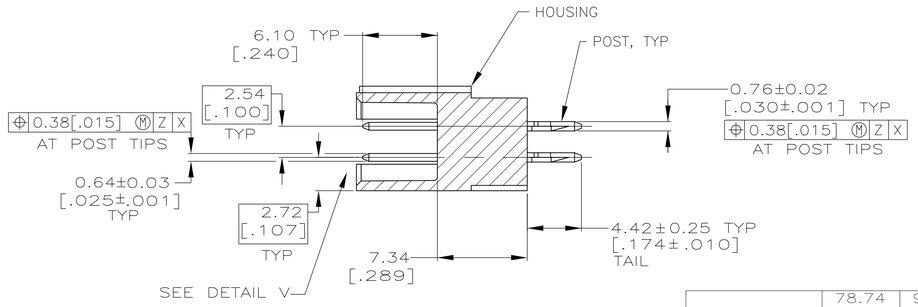

SECTION T-T

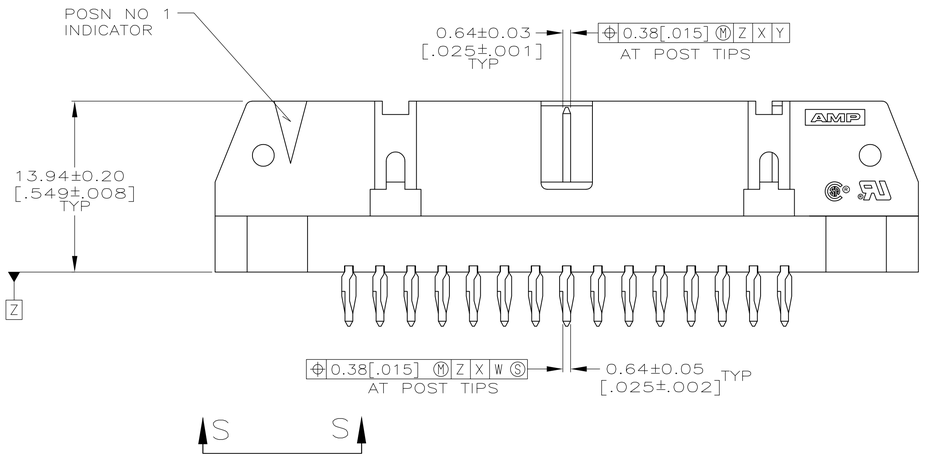

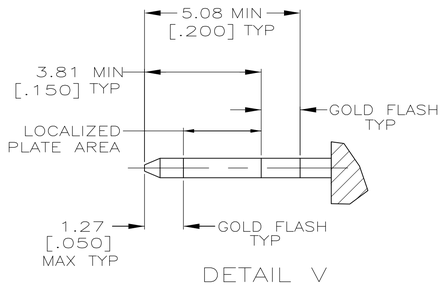

DETAIL V
SCALE 10:1

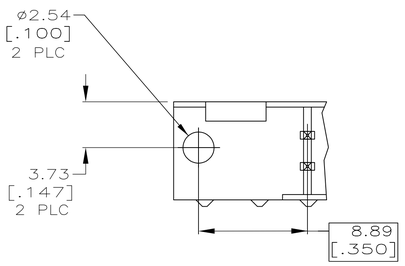

VIEW S-S

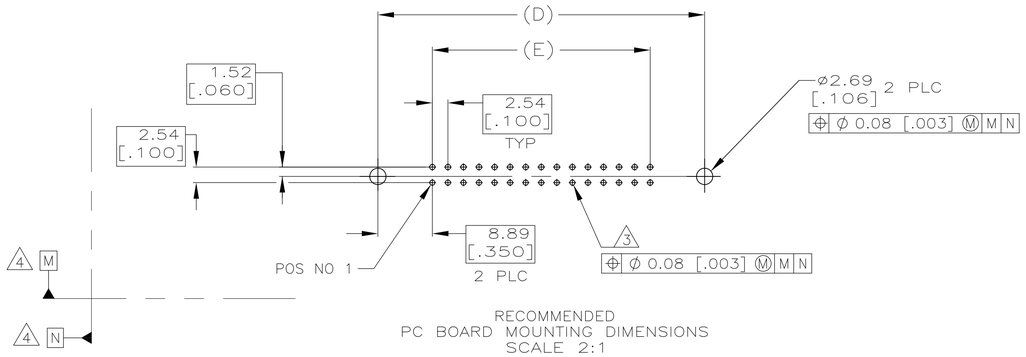

RECOMMENDED
PC BOARD MOUNTING DIMENSIONS
SCALE 2:1

OBSOLETE	BLUE	78.74 [3.100]	96.52 [3.800]	100.58 [3.960]	96.52 [3.800]	86.36 [3.400]	64	3-1658694-2
OBSOLETE		60.96 [2.400]	78.74 [3.100]	82.80 [3.260]	78.74 [3.100]	68.58 [2.700]	50	3-1658694-0
		48.26 [1.900]	66.04 [2.600]	70.10 [2.760]	66.04 [2.600]	55.88 [2.200]	40	2-1658694-9
		40.64 [1.600]	58.42 [2.300]	62.48 [2.460]	58.42 [2.300]	48.26 [1.900]	34	2-1658694-8
OBSOLETE		30.48 [1.200]	48.26 [1.900]	52.32 [2.060]	48.26 [1.900]	38.10 [1.500]	26	2-1658694-6
OBSOLETE		22.86 [.900]	40.64 [1.600]	44.70 [1.760]	40.64 [1.600]	30.48 [1.200]	20	2-1658694-4
		17.78 [.700]	35.56 [1.400]	39.62 [1.560]	35.56 [1.400]	25.40 [1.000]	16	2-1658694-3
		15.24 [.600]	33.02 [1.300]	37.08 [1.460]	33.02 [1.300]	22.86 [.900]	14	2-1658694-2
OBSOLETE		10.16 [.400]	27.94 [1.100]	32.00 [1.260]	27.94 [1.100]	17.78 [.700]	10	2-1658694-1
	BLACK	73.66 [2.900]	91.44 [3.600]	95.50 [3.760]	91.44 [3.600]	81.28 [3.200]	60	1-1658694-2
		40.64 [1.600]	58.42 [2.300]	62.48 [2.460]	58.42 [2.300]	48.26 [1.900]	34	1-1658694-1
		35.56 [1.400]	53.34 [2.100]	57.40 [2.260]	53.34 [2.100]	43.18 [1.700]	30	1-1658694-0
		25.40 [1.100]	45.72 [1.800]	49.78 [1.960]	45.72 [1.800]	35.56 [1.400]	24	1658694-9
		17.78 [.700]	35.56 [1.400]	39.62 [1.560]	35.56 [1.400]	25.40 [1.000]	16	1658694-8
		15.24 [.600]	33.02 [1.300]	37.08 [1.460]	33.02 [1.300]	22.86 [.900]	14	1658694-7
		10.16 [.400]	27.94 [1.100]	32.00 [1.260]	27.94 [1.100]	17.78 [.700]	10	1658694-6
		78.74 [3.100]	96.52 [3.800]	100.58 [3.960]	96.52 [3.800]	86.36 [3.400]	64	1658694-5
		60.96 [2.400]	78.74 [3.100]	82.80 [3.260]	78.74 [3.100]	68.58 [2.700]	50	1658694-4
		48.26 [1.900]	66.04 [2.600]	70.10 [2.760]	66.04 [2.600]	55.88 [2.200]	40	1658694-3
		30.48 [1.200]	48.26 [1.900]	52.32 [2.060]	48.26 [1.900]	38.10 [1.500]	26	1658694-2
		22.86 [.900]	40.64 [1.600]	44.70 [1.760]	40.64 [1.600]	30.48 [1.200]	20	1658694-1
HOUSING COLOR		E	D	C	B	A	NO OF POSN	PART NUMBER

THIS DRAWING IS A CONTROLLED DOCUMENT.

DIMENSIONS: mm [INCHES]

TOLERANCES UNLESS OTHERWISE SPECIFIED:
0 PLC ± -
1 PLC ± -
2 PLC ± 0.13[.005]
3 PLC ± -
4 PLC ± -
ANGLES ± -

MATERIAL 1 FINISH 2

DWN R. SAMICK 12JAN2004
CHK S. BOLASH 12JAN2004
APVD M. WALMSLEY 12JAN2004
PRODUCT SPEC 108-40019
APPLICATION SPEC 114-40020
WEIGHT -

TE Connectivity

NAME HEADER ASSY, UNIVERSAL, ACTION PIN AMP-LATCH

SIZE A1 | CAGE CODE 00779 | DRAWING NO C-1658694 | RESTRICTED TO -

CUSTOMER DRAWING | SCALE 4:1 | SHEET 1 OF 1 | REV H

4805 (3/11)