PART NO.	ENG. NO.
18-12-2222	2046-1(P901)L
18-12-2221	2046-1(P901)

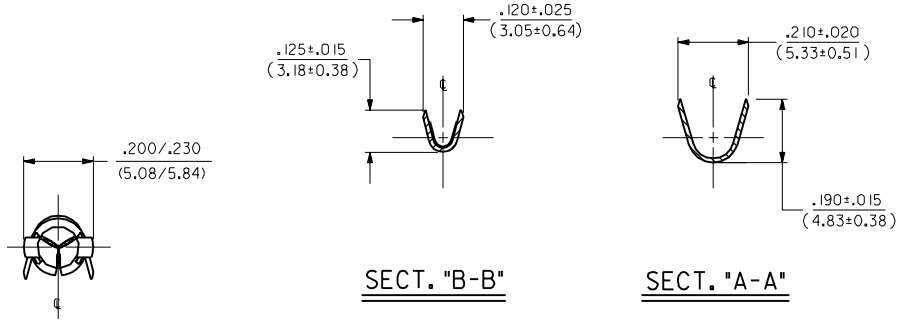

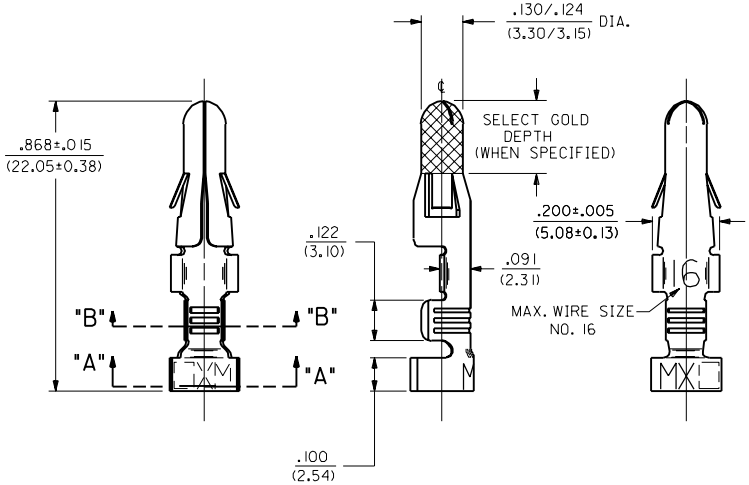

LEGEND

2046-1(****)*

- VERSION — .120/(3.05) MAX. DIA. INSULATION
- P=PREPLATE, BLANK=POSTPLATE
- FINISH CODE
- FORM: BLANK=CHAIN, L=LOOSE

NOTES:

1. TERMINAL FOR USE WITH .125/(3.17) SERIES HOUSINGS AND WILL ACCEPT 16 THRU 18 AWG WIRE HAVING A .120/(3.05) MAX. DIAMETER INSULATION.
2. INSERTION FORCE: 6.0 LBS. MAX. WHEN TERMINAL IS INSERTED INTO .125/(3.17) DIA. CORE HOLE.
3. PULL OUT FORCE: 30 LBS. MIN. RETENTION IN HOUSING .

FINISH CODES:

901 HOT TIN DIP .000020/(0.0005 1) MIN.

MATERIAL NOTES:

1. CARTRIDGE BRASS, ALLOY #C26000; .013/(0.33) THICK, SPRING TEMPER

LTR.	REVISIONS
D1	OBS. -1(555) & -1(555)L ECR U6 0379 GK 9/21/95 RW
D	ADD SELECT AREA ECR #U0 0230 3-5-90 RW
C	REVISE PER ECR U9 1189 11-28-89 TRM
B	REV. & REDRAWN ECR U8 1941 KBW 10-4-88 RW

MFG. SH. REV.

DIMENSIONS SHOWN (METRIC) INCH

UNLESS OTHERWISE SPECIFIED TOLERANCES: ANGULAR ± 1/2° 0

	INCH	METRIC
3 PLACE	± .010	---
2 PLACE	± .014	± 0.25
1 PLACE	---	± 0.35

DRAFT WHERE APPLICABLE MUST REMAIN WITHIN DIMENSIONS

DRWG. BY KBW CHK'D. BY RW
APP'D. BY RAS SCALE 4 : 1

=0 =0 REVISE ONLY ON CAD SYSTEM

TITLE CRIMP TERMINAL, MALE, .125/(3.17) DIA 16-18 AWG .120/(3.05) DIA. INSUL.

MOLEX INCORPORATED LISLE, ILL. 60532 U.S.A.

SHEET NO. 1 OF 1 DATE 10/4/88

PART NO. SEE CHART DRWG. NO. SD-2046-1•

FILE NAME S2046X1 DGN

THIS DRAWING CONTAINS INFORMATION THAT IS PROPRIETARY TO MOLEX INC. AND SHOULD NOT BE USED WITHOUT WRITTEN PERMISSION

DIV. CP SIZE C

NO P.S.