THIS DRAWING IS UNPUBLISHED. RELEASED FOR PUBLICATION - ,- .
© COPYRIGHT - By - ALL RIGHTS RESERVED.

LOC	DIST
GP	00

REVISIONS

P	LTR	DESCRIPTION	DATE	DWN	APVD
	D	REVISED PER ECO-13-005383	08AUG2013	CJV	CWR

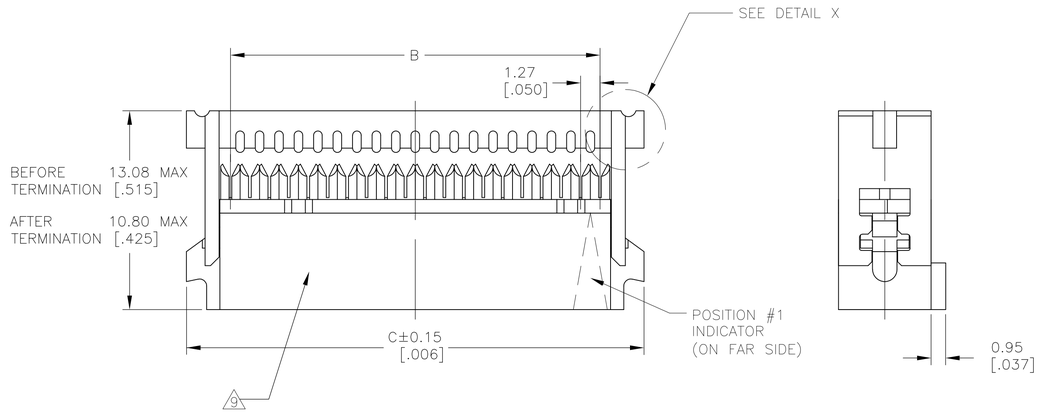

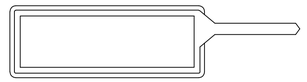

POLARIZING KEY
TYCO PART NUMBER: 1-1437023-2
T&B PART NUMBER (REF): 609-0000
PURCHASE SEPARATELY

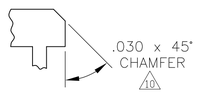

DETAIL X
SCALE 5:1

1. 20 POSITION CONNECTOR ASSEMBLY SHOWN.
2. MOLDED PARTS: THERMOPLASTIC, UL94V-0 RATED, COLOR BLUE. CONTACTS: BERYLLIUM COPPER.
3. CONTACTS: 0.00076[.000030] MIN GOLD ON MATING AREA, 0.00254-0.00508[.000100-.000200] BRIGHT TIN LEAD ON TERMINATION END, ALL OVER 0.00127[.000050] MIN NICKEL ON ENTIRE CONTACT.
4. CONTACTS: 0.00127[.000050] MIN GOLD ON MATING AREA, 0.00254-0.00508[.000100-.000200] BRIGHT TIN LEAD ON TERMINATION END, ALL OVER 0.00127[.000050] MIN NICKEL ON ENTIRE CONTACT.
5. POLARIZER FEATURE DOES NOT EXIST ON POSITION #1 END FOR 14 POSITION AND SMALLER ASSEMBLIES.
6. POLARIZER FEATURE DOES NOT EXIST ON THIS END FOR 6 POSITION ASSEMBLY.
7. FOR TERMINATION OF 28 OR 30 AWG STRANDED PVC INSULATED FLAT RIBBON CABLE.
8. STRAIN RELIEF PACKAGED SEPARATELY AND SHIPPED WITH ASSEMBLY.
9. DATE CODE STAMPED ON THIS SIDE OF CONNECTOR. 6 POSITION CONNECTORS EXCLUDED.
10. ALTERNATE COVER END APPLES TO INDICATED NUMBERS.
11. OBSOLETE PARTS: OBSOLETE CIS STREAMLINING PER D.RENAUD/D.SINISI

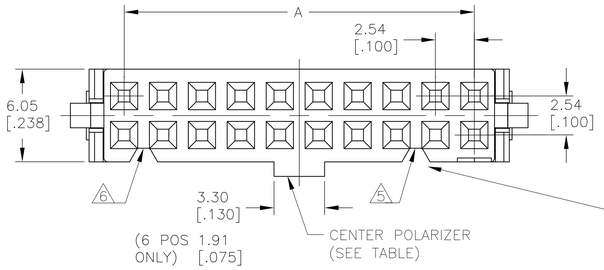

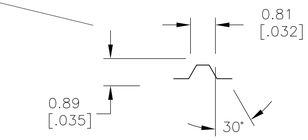

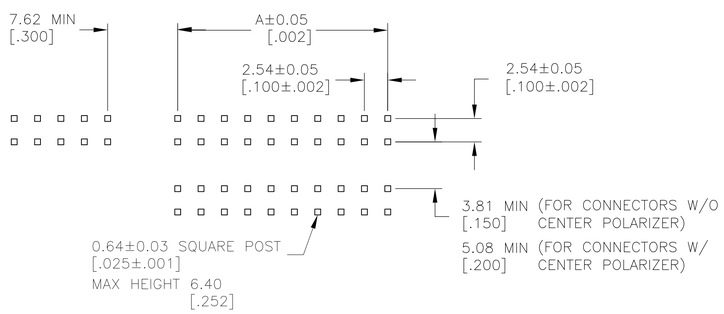

POST LAYOUT

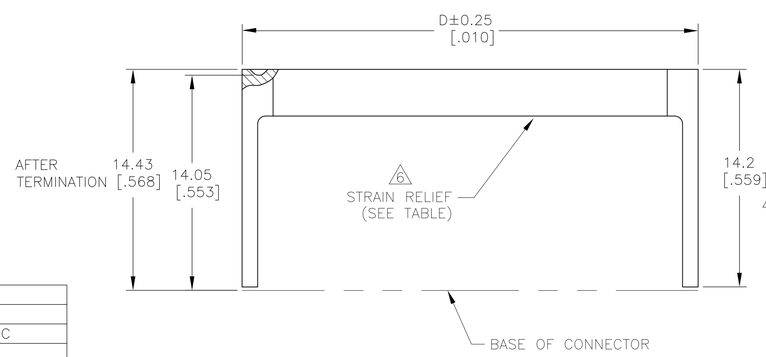

	STRAIN RELIEF	CENTER POLARIZER	CONTACT FINISH	D	C	B	A	NUMBER OF POSITIONS	T&B PART NUMBER (REFERENCE)	PART NUMBER
OBSOLETE	YES	YES	3	85.65[3.372]	85.75[3.376]	80.01[3.150]	78.74[3.100]	64	609-6441	1-1437022-5
OBSOLETE	NO	YES	3	–	85.75[3.376]	80.01[3.150]	78.74[3.100]	64	609-6430	1-1437022-2
SUPERSEDED BY 2-1658526-4	YES	YES	3	67.87[2.672]	67.97[2.676]	62.23[2.450]	60.96[2.400]	50	609-5041	8-1437021-3
SUPERSEDED BY 2-1658526-3	NO	YES	3	–	67.97[2.676]	62.23[2.450]	60.96[2.400]	50	609-5030	7-1437021-4
SUPERSEDED BY 2-1658526-2	YES	NO	3	67.87[2.672]	67.97[2.676]	62.23[2.450]	60.96[2.400]	50	609-5001M	7-1437021-1
11 SUPERSEDED BY 4-1658526-3	NO	NO	3	–	67.97[2.676]	62.23[2.450]	60.96[2.400]	50	609-5000M	~~6-1437021-8~~
SUPERSEDED BY 2-1658526-1	YES	YES	3	55.17[2.172]	55.27[2.176]	49.53[1.950]	48.26[1.900]	40	609-4041	5-1437021-7
SUPERSEDED BY 2-1658526-0	NO	YES	3	–	55.27[2.176]	49.53[1.950]	48.26[1.900]	40	609-4030	5-1437021-0
OBSOLETE	YES	NO	3	55.17[2.172]	55.27[2.176]	49.53[1.950]	48.26[1.900]	40	609-4001M	4-1437021-7
11 SUPERSEDED BY 4-1658526-1	NO	NO	3	–	55.27[2.176]	49.53[1.950]	48.26[1.900]	40	609-4000M	~~4-1437021-4~~
10 SUPERSEDED BY 4-1658526-0	YES	YES	3	50.09[1.972]	50.19[1.976]	44.45[1.750]	43.18[1.700]	36	609-3641	4-1437021-2
10 SUPERSEDED BY 3-1658526-8	NO	YES	3	–	50.19[1.976]	44.45[1.750]	43.18[1.700]	36	609-3630	4-1437021-0
	YES	YES	3	47.55[1.872]	47.65[1.876]	41.91[1.650]	40.64[1.600]	34	609-3441	3-1437021-4
	NO	YES	3	–	47.65[1.876]	41.91[1.650]	40.64[1.600]	34	609-3430	2-1437021-6
SUPERSEDED BY 1658623-8	YES	NO	3	47.55[1.872]	47.65[1.876]	41.91[1.650]	40.64[1.600]	34	609-3401M	2-1437021-2
OBSOLETE	NO	NO	3	–	47.65[1.876]	41.91[1.650]	40.64[1.600]	34	609-3400M	1-1437021-9
	YES	YES	3	37.39[1.472]	37.49[1.476]	31.75[1.250]	30.48[1.200]	26	609-2641	1-1437021-4
	NO	YES	3	–	37.49[1.476]	31.75[1.250]	30.48[1.200]	26	609-2630	1437021-5
SUPERSEDED BY 3-1658526-5	YES	NO	3	37.39[1.472]	37.49[1.476]	31.75[1.250]	30.48[1.200]	26	609-2601M	1437021-2
SUPERSEDED BY 3-1658526-5	NO	NO	3	–	37.49[1.476]	31.75[1.250]	30.48[1.200]	26	609-2600M	9-1437020-8
OBSOLETE	YES	YES	3	34.85[1.372]	34.95[1.376]	29.21[1.150]	27.94[1.100]	24	609-2441	9-1437020-6
SUPERSEDED BY 1-1658526-4	NO	YES	3	–	34.95[1.376]	29.21[1.150]	27.94[1.100]	24	609-2430	9-1437020-3
OBSOLETE	NO	NO	3	–	34.95[1.376]	29.21[1.150]	27.94[1.100]	24	609-2400M	9-1437020-1
	YES	YES	3	29.77[1.172]	29.87[1.176]	24.13[.950]	22.86[.900]	20	609-2041	8-1437020-8
	NO	YES	3	–	29.87[1.176]	24.13[.950]	22.86[.900]	20	609-2030	7-1437020-9
SUPERSEDED BY 3-1658526-0	YES	NO	3	29.77[1.172]	29.87[1.176]	24.13[.950]	22.86[.900]	20	609-2001M	7-1437020-6
SUPERSEDED BY 3-1658526-0	NO	NO	3	–	29.87[1.176]	24.13[.950]	22.86[.900]	20	609-2000M	7-1437020-2
11 SUPERSEDED BY 6-1437020-8	NO	NO	4	–	29.87[1.176]	24.13[.950]	22.86[.900]	20	609-2000MP005	~~7-1437020-3~~
	YES	YES	3	24.69[.972]	24.79[.976]	19.05[.750]	17.78[.700]	16	609-1641	6-1437020-8
	NO	YES	3	–	24.79[.976]	19.05[.750]	17.78[.700]	16	609-1630	6-1437020-1
SUPERSEDED BY 1-1658526-0	YES	NO	3	24.69[.972]	24.79[.976]	19.05[.750]	17.78[.700]	16	609-1601M	5-1437020-9
OBSOLETE	NO	NO	3	–	24.79[.976]	19.05[.750]	17.78[.700]	16	609-1600M	5-1437020-6
SUPERSEDED BY 1658526-9	YES	YES	3	22.15[.872]	22.25[.876]	16.51[.650]	15.24[.600]	14	609-1441	5-1437020-2
	NO	YES	3	–	22.25[.876]	16.51[.650]	15.24[.600]	14	609-1430	4-1437020-6
OBSOLETE	YES	NO	3	22.15[.872]	22.25[.876]	16.51[.650]	15.24[.600]	14	609-1401M	4-1437020-4
OBSOLETE	NO	NO	3	–	22.25[.876]	16.51[.650]	15.24[.600]	14	609-1400M	4-1437020-2
	YES	YES	3	17.07[.672]	17.07[.672]	11.43[.450]	10.16[.400]	10	609-1041	3-1437020-9
	NO	YES	3	–	17.17[.676]	11.43[.450]	10.16[.400]	10	609-1030	3-1437020-0
OBSOLETE	YES	NO	3	17.07[.672]	17.07[.672]	11.43[.450]	10.16[.400]	10	609-1001M	2-1437020-7
SUPERSEDED BY 1658526-3	NO	NO	3	–	17.17[.676]	11.43[.450]	10.16[.400]	10	609-1000M	2-1437020-4
10 SUPERSEDED BY 1658526-2	YES	YES	3	11.99[.472]	12.09[.476]	6.35[.250]	5.08[.200]	6	609-0641	2-1437020-2
10	NO	YES	3	–	12.09[.476]	6.35[.250]	5.08[.200]	6	609-0630	2-1437020-0
10 OBSOLETE	YES	NO	3	11.99[.472]	12.09[.476]	6.35[.250]	5.08[.200]	6	609-0601M	1-1437020-9
10 SUPERSEDED BY 2-1658526-5	NO	NO	3	–	12.09[.476]	6.35[.250]	5.08[.200]	6	609-0600M	1-1437020-8

ELECTRICAL PROPERTIES	
CURRENT RATING	1 AMP
INSULATION RESISTANCE	>1 x 10^9 OHMS @ 500 VDC
DWV	>500 VRMS AT SEA LEVEL
ENVIRONMENTAL PROPERTIES	
TEMPERATURE RATING	-55°C TO 125°C

THIS DRAWING IS A CONTROLLED DOCUMENT.

DIMENSIONS: INCHES

TOLERANCES UNLESS OTHERWISE SPECIFIED:
0 PLC ± –
1 PLC ± –
2 PLC ± –
3 PLC ± 0.13[.005]
4 PLC ± –
ANGLES ± –

MATERIAL 2

FINISH SEE TABLE

DWN J.GERACE 19AUG04
CHK C.ROHDE 19AUG04
APVD M.WALMSLEY 19AUG04

PRODUCT SPEC —
APPLICATION SPEC —
WEIGHT —

TE Connectivity

NAME CONNECTOR ASSEMBLY, FEMALE SOCKET TRANSITION –

SIZE	CAGE CODE	DRAWING NO	RESTRICTED TO
A1	00779	C-9-1437021-4	—

CUSTOMER DRAWING | SCALE 1:1 | SHEET 1 OF 1 | REV D

4805 (3/11)