REVISIONS			
REV	DESCRIPTION	DATE	APPROVED
02_0	REVISED	JD 8/7/95	DCam 9/7/95
B	PER EC 0U20-0692-00	9/27/01	C. Hoang 9/27/01

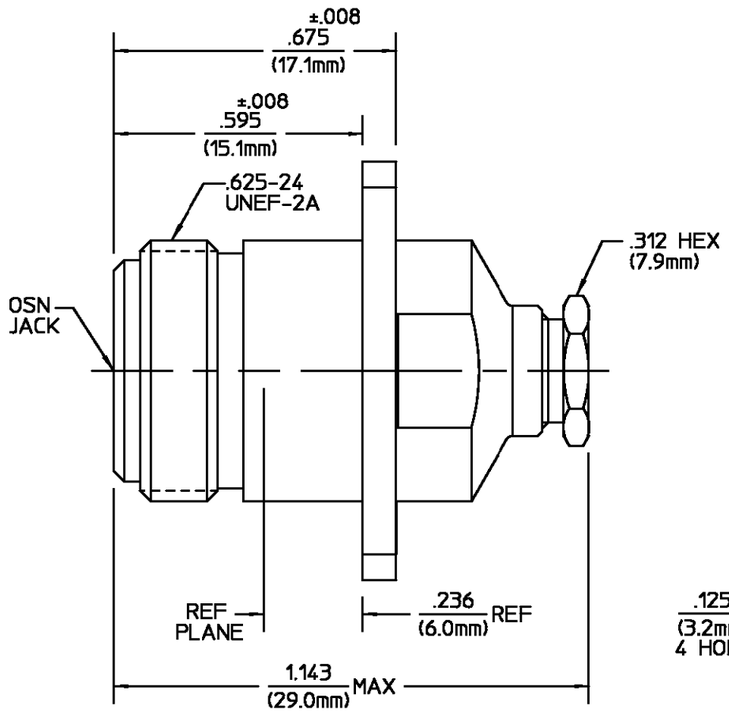

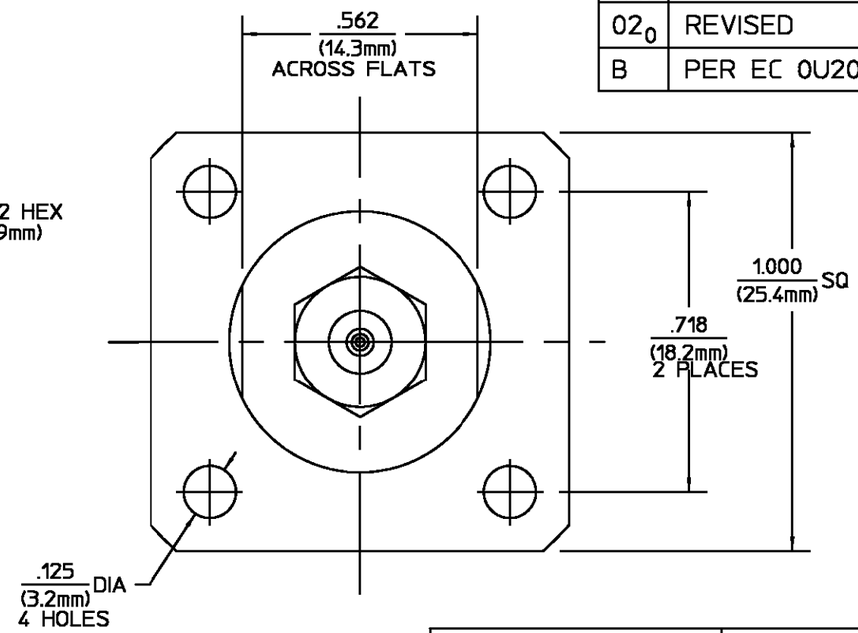

DESIGNED FOR USE WITH RD-316 CABLE	
CABLE ENTRY DIAMETER MINIMUM	
CLAMP NUT	.148
CONTACT	.022
COLLAR	.063
WASHER	.148
WEDGE	.135

DESIGN CONTROL REQUIRED

ELECTRICAL	
Nominal Impedance (Ohms)	50
Frequency Range (GHz) DC to	10GHz
Volt Rating (VRMS MAX)	
@ Sea Level	1,000
VSWR	1.30 MAX
Insertion Loss (dB MAX)	$.05\sqrt{fGHz}$
RF Leakage (dB MIN)	.90-fGHz
Corona, 70,000 Ft (VRMS MIN)	250
Dielectric Withstanding Voltage	
(VRMS MIN) @ Sea Level	1,500
Contact Resistance (Milliohms MAX)	
Center Contact	1.0
Outer Contact	.2
Cable to Housing	.05
RF High Potential @ Sea Level	
(VRMS MIN @ 5 MHz)	1,500
I.R.(Megohms MIN)	5,000

MECHANICAL	
Interface Dimensions MIL-STD-348A,	
Fig.	304.2
Recommended Mating	
Torque	12-15 IN-LBS
Mating Characteristics:	
Insertion (MAX Lbs)	2.0
Withdrawal (MIN Oz)	2.0
Force to Engage and	
Disengage (In-Lbs MAX)	3
Center Contact Captivation	
Axial (Lbs)	15
Cable Retention	
Axial Force (Lbs)	25

ENVIRONMENTAL
Temperature Rating -65°C to 125°C
Vibration MIL-STD-202, Method 204, Condition B
Shock MIL-STD-202, Method 213, Condition I
Thermal Shock MIL-STD-202, Method 107, Condition A, Except High Temp shall be 200°C
Moisture Resistance MIL-STD-202, Method 106, Except Vibration Shall Be Omitted
Corrosion - MIL-STD-1344, Method 001, Condition B, 5% salt spray 500 hours mated condition

COMPONENT	MATERIAL	FINISH
HOUSING, COLLAR, CLAMP NUT, WEDGE & WASHER	BRASS PER QQ-B-626 COMP. 360, HALF HARD	GOLD PLATE PER MIL-G-45204
DIELECTRIC & REAR DIELECTRIC	TFE FLUOROCARBON PER ASTM-D-1457	N/A
CONTACT EXT.	BERYLLIUM COPPER PER ASTM B 196, ALLOY C17300, CONDITION H	GOLD PLATE PER MIL-G-45204
CENTER CONTACT	BRASS PER QQ-B-16, HALF HARD	GOLD PLATE PER MIL-G-45204

UNLESS OTHERWISE SPECIFIED DIMENSIONS ARE IN INCHES TOLERANCE ON

FRAC.	DEC.	ANGLES
± 1/64	±.005	± 1°

		DATE
DRAWN BY	M.Y.	8-28-91
CHECKED BY	M.C.	9-3-91
APP'D BY	R.L.	9-6-91

AMP Incorporated
140 Fourth Avenue
Waltham, MA 02451-7599

These drawings and specifications are the property of M/A-COM Incorporated and shall not be reproduced or copied or used in whole or in part as the basis for the manufacture or sale of item(s) without written permission.

USE ASS'Y PROCEDURE

408-04754

NO. A.P. 30-123

TITLE
OSN 4 HOLE FLANGE MOUNT
CABLE JACK-CLAMP ATTACHMENT

SIZE	CODE IDENT NO.		REV
B	26805	3006-5024-94	02_0
SCALE 3:1			SHEET 1 OF 1

CUSTOMER DRAWING

AMP PART # 1058582-1
SHEET 1 OF 1 REV B