The product information in this catalog is for reference only. Please request the Engineering Drawing for the most current and accurate design information.

Miniature Waterproof Shielded Connectors

LF Series

Mated dimensions (Example : LF07)

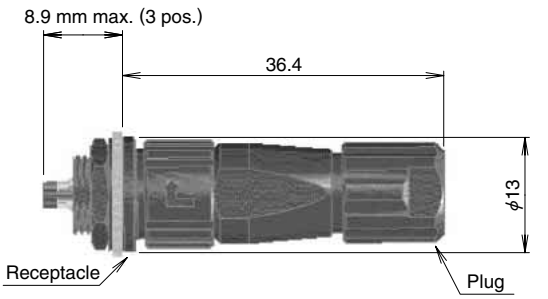

Short turn bayonet lock

Mating:
Insert the plug, and then turn the locking collar clockwise, as indicated by the coupling direction marking.

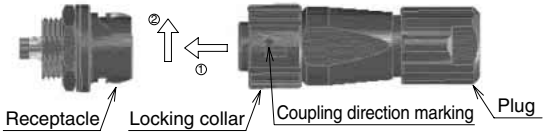

Un-mating:
Turn the locking collar counter-clockwise than pull off the plug.

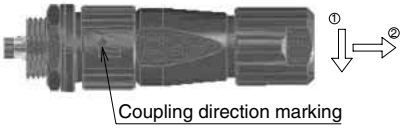

Shielding Connection - Plug

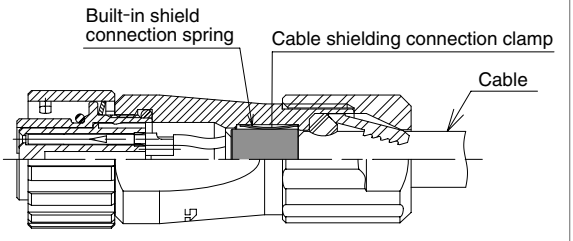

■Features

1. Ease of shielded termination and connector assembly

All components are self-aligning and do not require complex assembly tooling. The shield of the cable is connected with the metal housing of the connector using simple shielding clamp, supplied with the connector.

2. Water and dust protected

IP68 protection rating. Complete protection against dust penetration and against water penetration when mated assembly is submerged at the depth of 1.8 meter for 48 hours.

3. Bayonet lock

Short turn bayonet lock assures secure vibration resistant mating of the connectors.

4. Acquired safety standard

4 pos. is 10A and meets safety standards (TÜV)
Also 3- and 4-pos. have acquired the UL standard.

5. High current rating capacity

Number of contacts	Current rating
3	5A max.
4	10A max.
6, 12 and 20	2A max.
11	10A max. 2A max.

■Product Specifications

Rating	Voltage rating	125V AC, 175V DC (3 pos.) 125V AC, 125V DC (4 pos.) 30V AC, 42V DC (6 pos. , 12pos. , 20pos.) 125V AC, DC (11 pos. A to D) 30V AC, 42V DC (11 pos. 1 to 7)
	Current rating	5A max. (3 pos.) 10A max. (4 pos.) 2A max. (6 pos. , 12pos. , 20pos.) 10A(11 pos. A to D), 2A(11 pos. 1 to 7)
	Operating temperature range	−25℃ to +85℃ (Note 1)
	Storage temperature range	−10℃ to +60℃ (Note 2)

Item	Specification	Conditions
1.Contact resistance	15 mΩ max. (3, 6, 12, 20 pos.) 5 mΩ max. (4 pos.) 5 mΩ max. (A to D), 15mΩ max. (1 to 7)(11 pos.)	1A DC
2.Insulation resistance	1000 MΩ min.	500V DC (3, 4 pos.) 100V DC (6, 12, 20 pos.) 500V DC (A to D), 100V DC (1 to 7)(11pos.)
3.Withstanding voltage	No flashover or insulation breakdown.	1250V AC/one minute (3, 4 pos.) 300V AC/one minute (6, 12, 20 pos.) 1250V AC(A to D),300V AC(1 to 7) / one minute(11pos.)
4.Vibration	No electrical discontinuity for 10μs max.	Frequency: 10 to 55Hz, single amplitude of 0.75mm, acceleration of 98 m/s^2 for 3 hours in 3 axis.
5.Shock	No electrical discontinuity for 10μs max.	Acceleration of 490m/s^2, 11ms duration, sine half-wave waveform, 3 cycles in each of the 3 axis.
6.Durability (Mating/un-mating)	30 mΩ max. (3, 6, 12, 20 pos.) 10 mΩ max. (4 pos.) 10 mΩ max.(A to D), 30 mΩ max.(1 to 7)(11pos.)	1000 cycles
7.Temperature cycle	Insulation resistance: 100 MΩ min.	Temperature: -55℃ → Room temperature → +125℃ → Room temperature Time: 30 → 2 to 3 → 30 → 2 to 3 (minutes) 5 cycles
8.Humidity	Insulation resistance: 10 MΩ min. (When temperature high) Insulation resistance: 100 MΩ min. (Dray state)	96 hours at temperature of 40℃ and humidity of 90% to 95%.
9.Water / dust protection	When mated with corresponding connector.	Complete dust protection. No water penetration when submerged for 48 hours at the depth of 1.8 meter.

Note 1: Includes temperature rise caused by the current flow.
Note 2: The term “storage” refers to products stored for long period of time prior to mounting and use. Operating temperature range and humidity range covers non-conducting condition of installed connectors in storage, shipment or during transportation.

■Materials / Finish

Components	Material	Finish / Color	Remarks
Body / back shell	Zinc alloy	Nickel plated	————
Insulator	PPS	Black	UL94V-0
Contacts	Copper alloy	Gold plated	————
Gasket	Chloroprene rubber	Black	————

■Ordering Information

Please determine the specific product. If listed needed, please select and order the product No.

LF 07 - W B P✱ - 6 S

❶ ❷ ❸ ❹ ❺ ❻ ❼

❶ Series name		: LF
❷ Shell size	07 10 13	
❸ Waterproof	W : Waterproof type	
❹ Lock Mechanism	B : Bayonet lock	
❺ Connector type	P : Plug R : Receptacle J : Jack (✱:Form change zoning symbols in an identical class)	
❻ Number of contacts	: 3, 4, 6, 11, 12, 20	
❼ Contact type	P : Male contact S : Female contact	

■Plugs

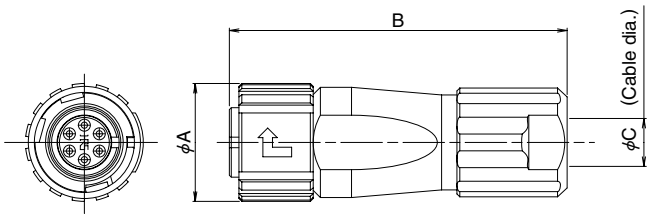

(Shown one example)

Unit:mm

Part number	CL No.	Contact	Number of contacts	φA	B	φC	Weight
LF07WBP-3S	136-0003-7	Female	3	12.3	35.8	5	11g
LF07WBP-3P	136-0004-0	Male					
LF07WBP-6S	136-0001-1	Female	6				
LF07WBP-6P	136-0002-4	Male					
LF10WBP-4S	136-0005-2	Female	4	14.8	41.8	7.3	17g
LF10WBP-4P	136-0006-5	Male					
LF10WBP-12S	136-0007-8	Female	12				
LF10WBP-12P	136-0008-0	Male					
LF13WBP-20S	136-0009-3	Female	20	17.9	51.9	8.7	29g
LF13WBP-20P	136-0010-2	Male					
LF13WBP-11S	136-0011-5	Female	11				
LF13WBP-11P	136-0012-8	Male					

■Plugs

●Lock ease type

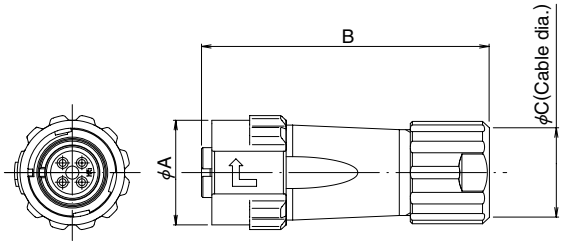

Unit:mm

Part number	CL No.	Contact	Number of contacts	φA	φB	C	Weight
LF10WBPD-4S	136-0014-3-00	Male	4	16.8	41.8	7.3	19g
LF10WBPD-4P	136-0017-1-00	Female					
LF10WBPD-12S	136-0015-6-00	Male	12				
LF10WBPD-12P	136-0018-4-00	Female					

■Receptacles

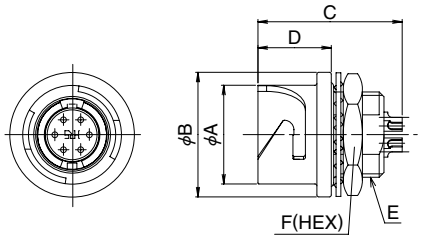

Unit:mm

Part number	CL No.	Contact	Number of contacts	φA	φB	C	D	E	F	Weight
LF07WBR-3P	136-1003-2	Male	3	10.3	13	16.55	7.65	M9×0.75	11	4g
LF07WBR-3S	136-1004-5	Female								
LF07WBR-6P	136-1001-7	Male	6			15.05				
LF07WBR-6S	136-1002-0	Female				15.25				
LF10WBR-4P	136-1005-8	Male	4	12.8	15.3	19.05	7.75	M11×0.75	13	6g
LF10WBR-4S	136-1006-0	Female								
LF10WBR-12P	136-1007-3	Male	12			17.25				5g
LF10WBR-12S	136-1008-6	Female								6g
LF13WBR-20P	136-1009-9	Male	20	15.9	18.3	17.25	7.75	M14×0.75	17	9g
LF13WBR-20S	136-1010-8	Female								10g
LF13WBR-11P	136-1011-0	Male	11			19.05				9g
LF13WBR-11S	136-1012-3	Female								10g

Note: Recommended hex nut tightening torque: 1.5 to 2 N·m (3,4,6, and 12 pos.), 2 to 2.5 N·m (11, 20 pos.)

■Receptacles

●Rear panel mount type・Solder Type

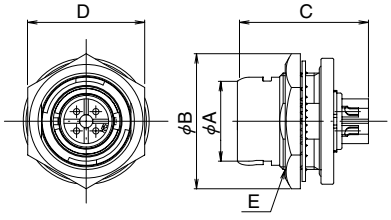

Unit:mm

Part number	CL No.	Contact	Number of contacts	φA	φB	C	D	E	Weight
LF10WBRB-4P	136-1118-4-00	Male	4	12.8	18.3	19.05	17	M14×0.75	10g
LF10WBRB-12P	136-1013-6-00	Male	12			17.25			
LF10WBRB-12S	136-1014-9-00	Female							

●Rear panel mount type · Through hole Type

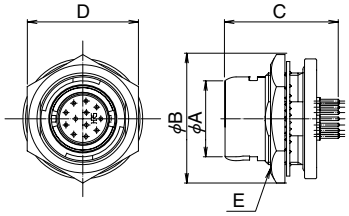

Unit:mm

Part number	CL No.	Contact	Number of contacts	φA	φB	C	D	E	Weight
LF10WBRB-12PD	136-1015-1-00	Male	12	12.8	18.3	17.5	17	M14×0.75	10g
LF10WBRB-12SD	136-1016-4-00	Female							

■Jacks

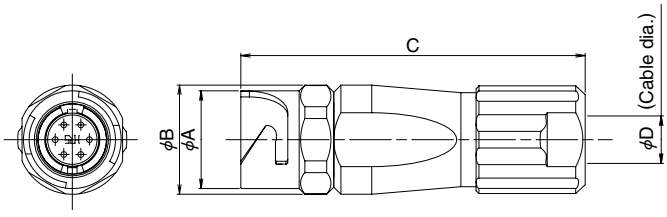

(Shown one example)

Unit:mm

Part number	CL No.	Contact	Number of contacts	φA	φB	C	φD	Weight
LF07WBJ-3P	136-2003-8	Male	3	10.3	11.5	36.3	5	11g
LF07WBJ-3S	136-2004-0	Female						
LF07WBJ-6P	136-2001-2	Male	6					
LF07WBJ-6S	136-2002-5	Female						
LF10WBJ-4P	136-2005-3	Male	4	12.8	13.8	42.4	7.3	16g
LF10WBJ-4S	136-2006-6	Female						
LF10WBJ-12P	136-2007-9	Male	12					
LF10WBJ-12S	136-2008-1	Female						
LF13WBJ-20P	136-2009-4	Male	20	15.9	16.9	52.4	8.7	29g
LF13WBJ-20S	136-2010-3	Female						30g
LF13WBJ-11P	136-2011-6	Male	11					29g
LF13WBJ-11S	136-2012-9	Female						30g

■CAP

●For Receptacles

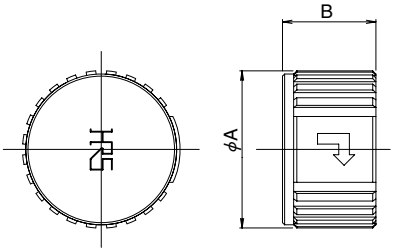

Unit:mm

Part number	CL No.	Applicable connector	φA	B	Weight
LF10WBR-C	136-3001-8-00	LF10EBR-4P	14.8	8.8	5g
		LF10WBR-4S			
		LF10WBR-12P			
		LF10WBR-12S			
		LF10WBRB-4P			
		LF10WBRB-12P			
		LF10WBRB-12S			
		LF10WBRB-12PD			
		LF10WBRB-12SD			
LF13WBR-C	136-3003-3-00	LF13WBR-20P	17.9	8.75	7g
		LF13WBR-20S			
		LF13WBR-11P			
		LF13WBR-11S			

■Applicable tools

Unit:mm

Description	Part number	CL No.	LF series Applicable cable dia.
Manual cable clamp crimp	HR10A-TC-02	150-0041-2	5 (Note)
	LF-TC-01	150-0234-6	7.3 · 8.7

Note: Applicable cable dia. is only 5mm for LF series.

■Solder termination fixture

(Shown one example)

(Shown one example)

Part number	CL No.	Applicable connectors
LF07BP-T01	150-0232-0	LF07WBP-6S,6P,3S,3P
LF07BJ-T01	150-0233-3	LF07WBJ-6S,6P,3S,3P
LF10BP-T01	150-0235-9	LF10WBP-4S,4P,12S,12P
LF10BJ-T01	150-0236-1	LF10WBJ-4S,4P,12S,12P
LF13BP-T01	150-0237-4	LF13WBP-20S,20P,11S,11P
LF13BJ-T01	150-0238-7	LF13WBJ-20S,20P,11S,11P

■Panel Cutout

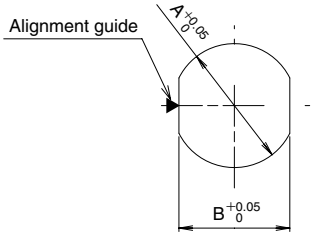

unit (mm)

Shell size	A	B	Panel thickness
LF07WBR-※※	ϕ9.05	8.1	0.7 to 2
LF10WBR-※※	ϕ11.05	10.2	0.7 to 2
LF13WBR-※※	ϕ14.05	13.1	0.7 to 2
LF10WBRB-※※	ϕ14.05	13.1	0.7 to 2

■Contact position arrangement and specifications

Shell size	LF07		LF10		LF13		
Contact configuration	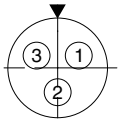	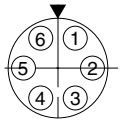	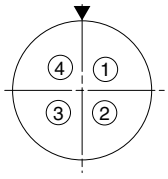	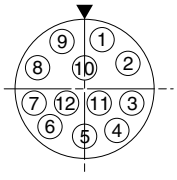	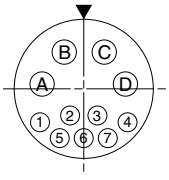	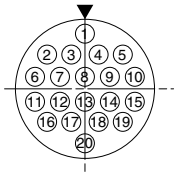	
Number of contacts	3	6	4	12	11		20
Withstanding voltage	1250V AC	300V AC	1250V AC	300V AC	4: AC1250V	7: AC300V	AC300V
Current rating	5A	2A	10A	2A	4: 10A	7: 2A	2A
Insulation resistance	1000MΩ		1000MΩ	1000MΩ	1000MΩ		1000MΩ
Contact resistance	15mΩ		5mΩ	15mΩ	4: 5mΩ	7: 15mΩ	4mΩ
Solder pot inner diameter	1.15mm	0.8mm	1.7mm	0.8mm	4: ϕ1.7	7: ϕ0.8	0.8mm

Note 1: The contact configuration as viewed from the female contact connector mating side.
Note 2: The ▼ symbol indicates polarizing key position.
Note 3: Withstanding voltages are test voltage values.

■Termination and Assembly Instructions

The connectors are delivered with pre-assembed condition and the disassembly as shown No.1.

No.	Illustration	Operation
1	① 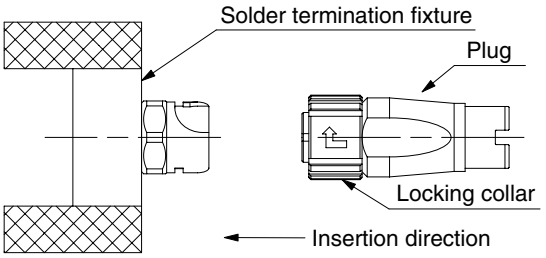	**Plug disassembly** ① Insert the plug into securely held solder termination fixture as shown. Fixture Part No. / Applicable connector LF07BP-T01 / LF07WBP-6S,6P,3S,3P LF10BP-T01 / LF10WBP-4S,4P,12S,12P LF13BP-T01 / LF13WBP-20S,20P,11S,11P
	② 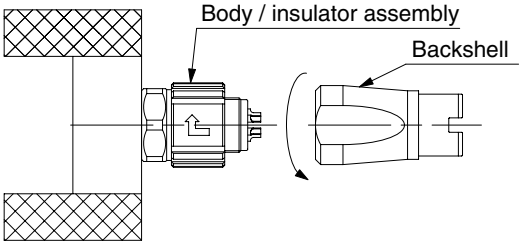	② Loosen the backshell turning it counter clockwise and remove it from the body/ insulator assembly.
	① 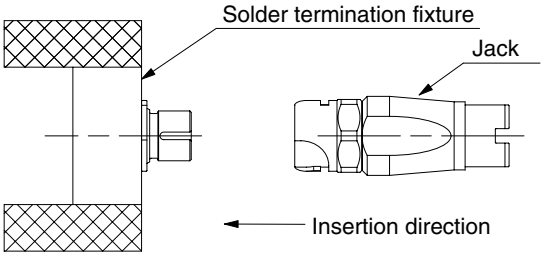	**Jack Disassembly** ① Insert the jack into the securely held solder termination fixture as shown. Fixture Part No. / Applicable connector LF07BJ-T01 / LF07WBJ-6S,6P,3S,3P LF10BJ-T01 / LF10WBJ-4S,4P,12S,12P LF13BJ-T01 / LF13WBJ-20S,20P,11S,11P
	② 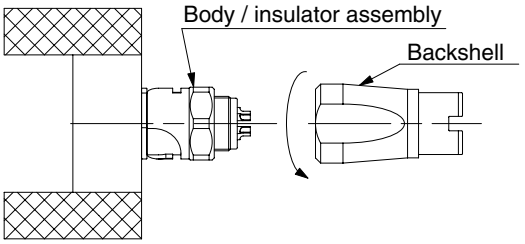	② Loosen the backshell turning it counterclockwise.
2	① 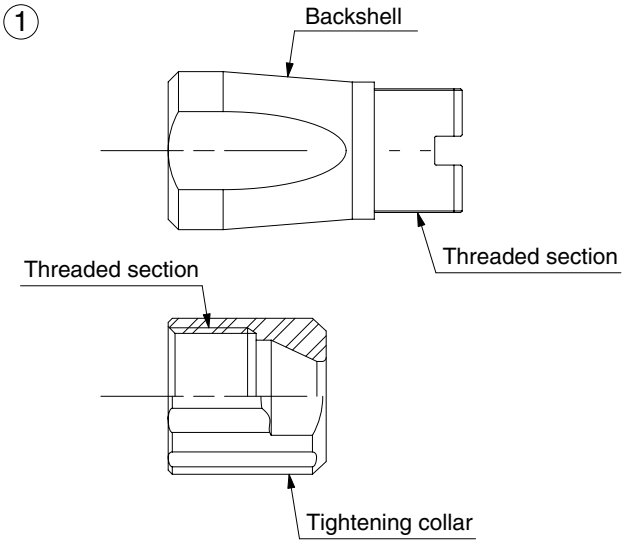	**Connector Assembly** ① Apply a coating of Loctite 7649 (Manufactured by Henckel Japan, Ltd,) primer to the threaded sections of the backshell and the tightening collar. Completely dry the coated surfaces. Notes (1) Drying time at room temperature is approximately 30 to 70 seconds. (2) Ensure sufficient ventilation of the area at time of drying. (3) Take necessary steps to protect the coated surfaces from contamination.

No.	Illustration	Operation
2	② 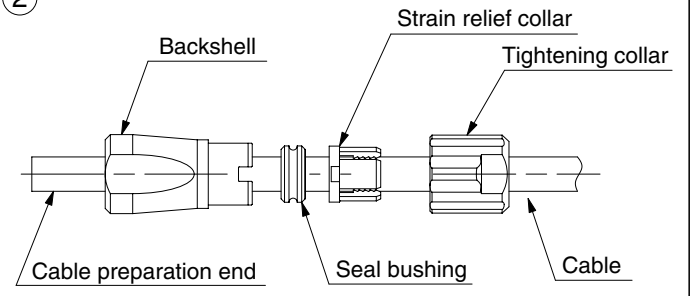	② Thread the tightening collar, strain relief collar, seal bushing and the backshell over the cable as illustrated. Notes Threading the components may not be possible after the cable-end finishing process
3	① 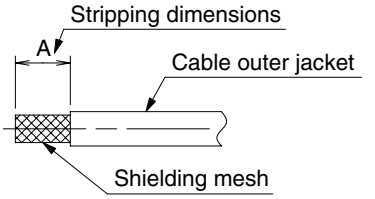 Table 1. Stripping Dimensions	**Cable preparation** ① Strip the cable's outer jacket to the dimensions illustrated in the table 1. Notes (1) Exercise caution not to damage the shielding mesh. (2) Any damage to the cable's outer jacket may affect the waterproof performance of the assembled connector.

Number of Conductors	A mm
3	8 to 9
6	
4	13 to 14
12	14 to 15
11	22 to 23 (No.A to D) 23 to 24 (No.1 to 7)
20	23 to 24

	② 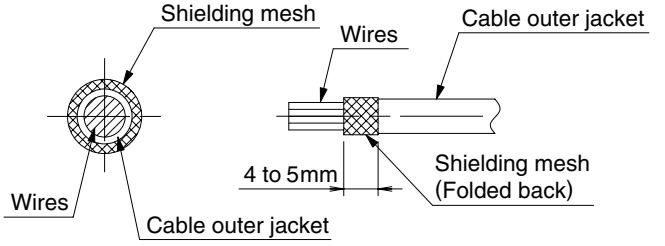	② Fold back the shielding mesh over the cable's outer jacket assuring that it is uniform on its diameter.
	③ 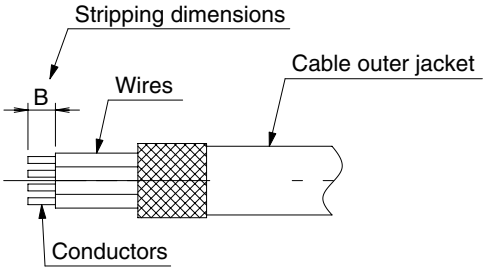 Table 2. Stripping Dimensions	③ Strip the wires to the dimensions illustrated in the Table 2. Notes When stripping the wires exercise caution not to damage it's insulation, folded over shielding mesh or cable's outer jacket. It may cause deffects in insulation, conduction, and waterproof performance.

Number of Conductors	B mm
3	2.5±0.5
6	2±0.5
4	3±0.5
12	2±0.5
11	3±0.5 (No.A to D)
	2±0.5 (No.1 to 7)
20	2±0.5

No.	Illustration	Operation
4		**Soldering** ① Soldering conditions Soldering iron tip temperature: 350±10℃ Soldering time: within 5 sec. Notes (1) Assure that the solder compound is sufficiently melted on the soldering iron tip. (2) When applying, make sure that the solder will flow correctly at all the contact surfaces between the conductor and the contact.
	② – 1 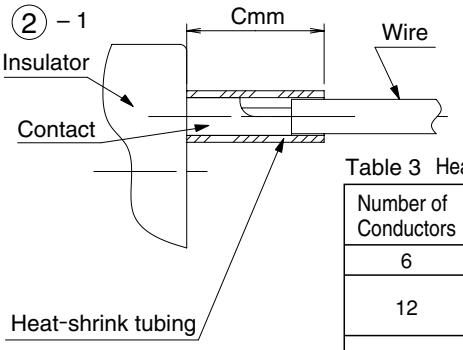 Table 3 Heat shrink tubing Dimensions Number of Conductors / Number of contacts / C mm 6 / 1 to 6 / 4 12 / 1 to 9 / 4 12 / 10 to 12 / 6 20 / 1 to 5,16 to 20 / 4 20 / 6 to 15 / 6 11 / 1 to 4 / 6 11 / 5 to 7 / 4	② – 1 6, 12, 20, 11(No.1～7) Conductors (1) Place a heat-shrink tubing (inside diameter of 1.1 mm min.) over every other wire. (2) Perform the soldering of the contact and the conductor, with the wire's insulation touching the contact as shown. (3) After soldering, slide the heat shrink tubing over the soldered joint and shrink it. The tubing should touch the insulator as shown.
	② – 2 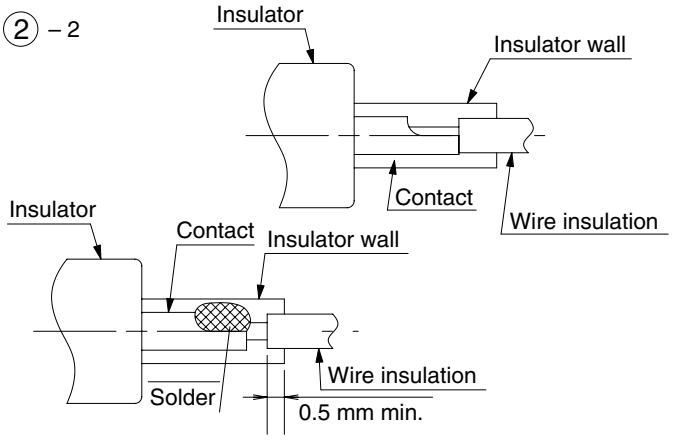 	② – 2 3, 4, 11(No.A～D) Conductors (1) Perform the soldering of the contact and the conductor, with the wire's insulation touching the contact as illustrated. (2) When soldering, to maintain the insulation between adjacent contacts. Make sure that the wire's insulation remains below the edge of the insulator's wall 0.5 mm min., as illustrated.
	③ 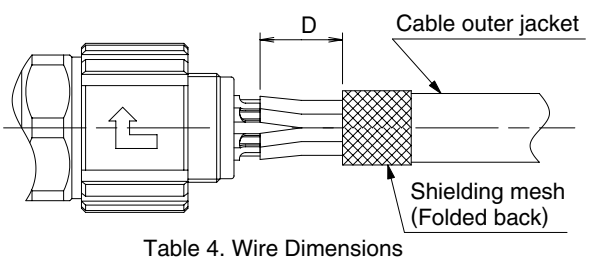 Table 4. Wire Dimensions Number of Conductors / D mm 3 / 6 to 7 6 4 / 10 to 11 12 / 13 to 14 11 / 18 to 19 20	③ After the soldering, keep a distance of D between the contact end and the cable's outer jacket as illustrated. Note The distance of D is required in order to assure correct assembly of the backshell.

No.	Illustration	Operation
5	① 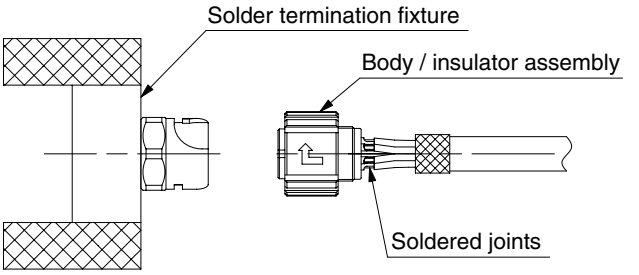	**Crimping of the Shielding Clamp** ① After completion of the soldering operations carefully remove (holding on the locking collar) the body/insulator assembly from the solder termination fixture. Note Exercise caution not to damage or deform the solder joints.
	② 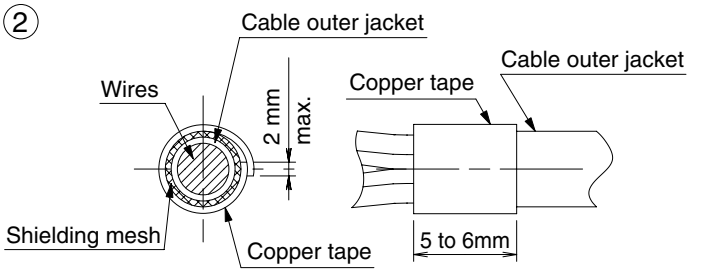	② Wrap the folded over shielding mesh with 5 to 6 mm wide copper tape to assure that it will not become loose. Apply the copper tape so that the shielding mesh does not protrude from under it. Note After wrapping the copper tape, the tape should overlap itself by 2 mm max.
	③ 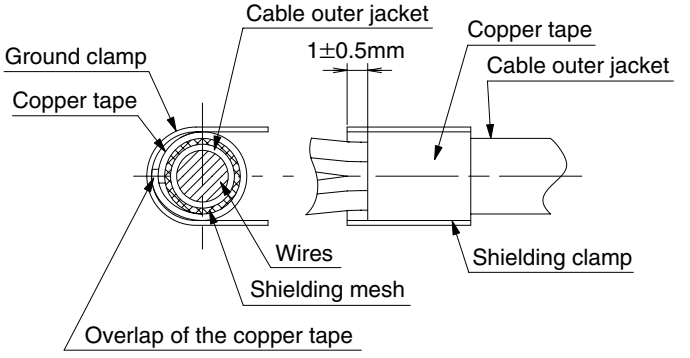	③ Insert the "U" shaped shielding clamp over the copper tape as shown on the illustration. It is critical that the overlap of the copper tape is located inside the shielding clamp as shown on the illustration. Note When the end of the copper tape wrapping is positioned at the open side of the ground fitting, the end portion of the copper tape wrapping will no longer be covered by the ground fitting when the ground fitting is crimped.
	④ 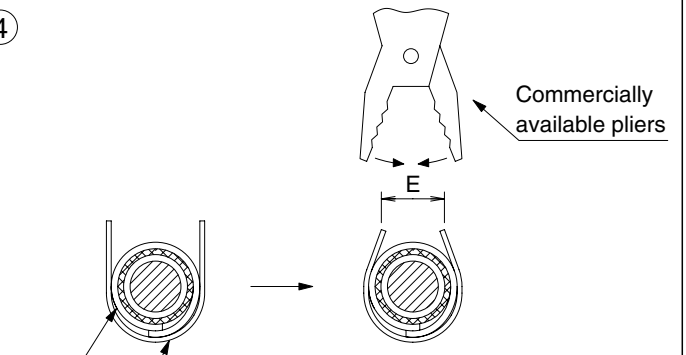 Table 5 Shell size: E LF07: 5mm max. LF10, LF13: 7mm max.	④ Using commercially available pliers bend the open ends of the shielding clamp as illustrated, assuring that it stays in place. The dimension of E. between opposing edges of the shielding clamp is necessary to assure correct final crimp.

No.	Illustration	Operation

5

⑤

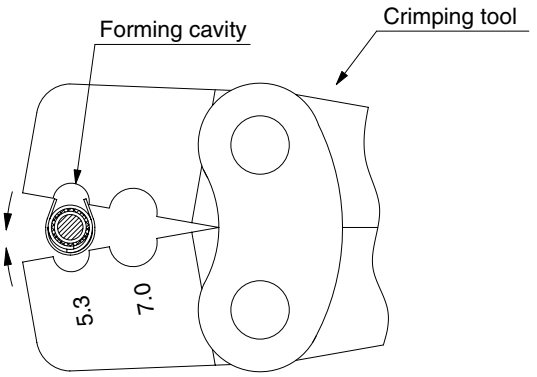

⑤ Both sides of the shielding clamp must be placed in the forming cavity of the tool (as shown on the illustration) and crimped over the cable by closing the tool completely.

Crimping tool	Forming cavity	Applicable cable diameter	Shielding clamp diameter after crimping
HR10A-TC-02	5.3	5mm	5.3mm to 5.5mm
	7.0	——	——
LF-TC-01	7.9	7.3mm	7.9mm to 8.1mm
	9.1	8.7mm	9.1mm to 9.3mm

6

①, ②

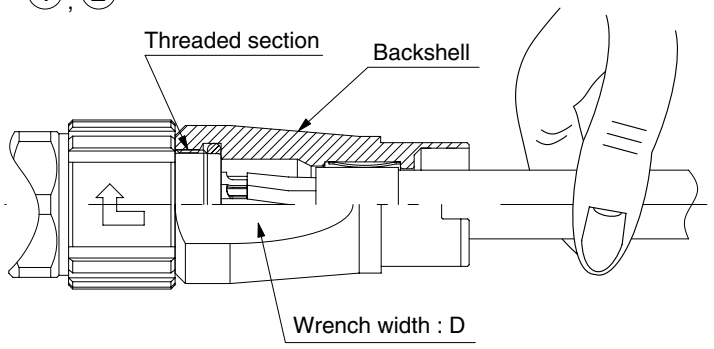

Table 6 (Recommend tightening torgue)

Shell size	Tightening torque	Wrench width
LF07	1N·m～1.5N·m	10mm
LF10	1N·m～1.5N·m	13mm
LF13	1.5N·m～2N·m	16mm

Connector Assembly

① Place the body/insulator assembly in the applicable solder termination fixture.

For plug assembly

Fixture Part No.	Applicable connector
LF07BP-T01	LF07WBP-6S,6P,3S,3P
LF10BP-T01	LF10WBP-4S,4P,12S,12P
LF13BP-T01	LF13WBP-20S,20P,11S,11P

For jack assembly

Fixture Part No.	Applicable connector
LF07BJ-T01	LF07WBJ-6S,6P,3S,3P
LF10BJ-T01	LF10WBJ-4S,4P,12S,12P
LF13BJ-T01	LF13WBJ-20S,20P,11S,11P

② Coat the thread section of the body/insulator assembly with Loctite 271 compound (manufactured by Henckel Japan, Ltd.) or equivalent, tightening it with a torque specified in the table 6.

Note
It is critical that the cable itself will not turn or twist during this operation.
It may cause breakage at the soldered area.

③, ④

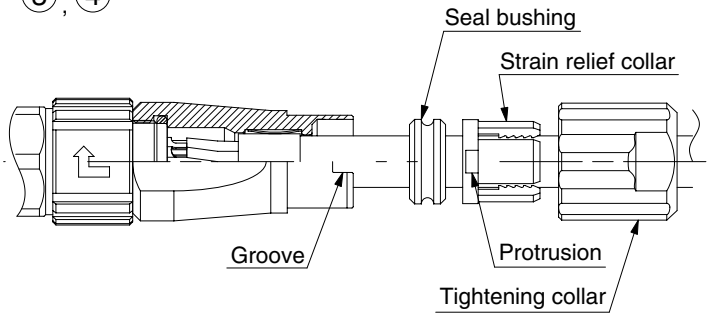

③ Slide forward the seal bushing and insert it in the backshell until fully seated.

④ Slide forward the strain relief collar and insert it in the backshell, making sure that the opposing protrusions fit inside the corresponding grooves, as shown on the illustration.

Note
It is critical that the protrusions are inside the corresponding grooves.
It may cause breakage, when a tightening collar is assembled.

⑤

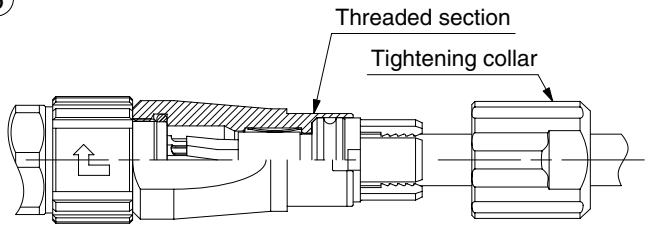

⑤ Verify that the Locktite 7649 primer (or equivalent) on the threaded sections of the backshell and tightening collar are dry.
Apply the Locktite 271 compound to the tightening collar's threaded section and attach it to the backshell.

No.	Illustration	Operation
6	⑥ 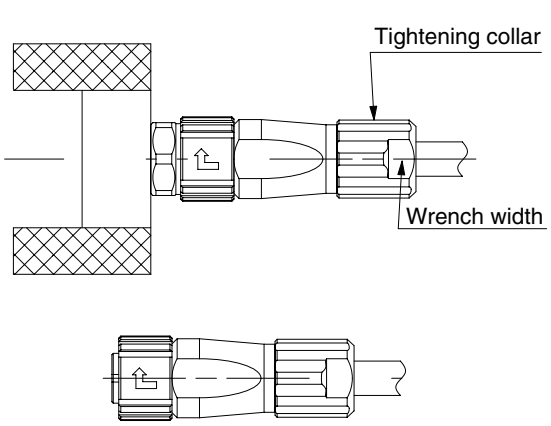	⑥ Remove the connector from the solder termination fixture, holding it by the locking collar. Do not pull on the cable. It may cause breakage. Recommended tightening torgue Shell size / Tightening torque / Wrench width LF07 / 0.8N·m～1N·m / 10mm LF10 / 0.7N·m～1N·m / 13mm LF13 / 1 N·m～1.5 N·m / 16mm

1. To maintain the water/dust protection performance and the cable clamp force, use a cable that is within the range of applicable diameter.
2. Consult HRS representative when using different cables.

■Cable Specifications (Reference)

	No. of contact	3 pos.	4 pos.	6 pos.	12 pos.	20 pos.	11 pos.	
Conductor	Material	Soft copper wire	Soft copper wire	Soft copper wire	Soft copper wire	Soft copper wire	Soft copper wire	Soft copper wire
	Size (mm)	ϕ0.18	ϕ0.26	ϕ0.16	ϕ0.16	ϕ0.16	ϕ0.26	ϕ0.16
	Construction	20 /ϕ0.18 mm dia.	20 /ϕ0.26 mm dia.	7 /ϕ0.16 mm dia.	7 /ϕ0.16 mm dia.	7 /ϕ0.16 mm dia.	26 /ϕ0.26 mm dia.	7 /ϕ0.16 mm dia.
	Size (AWG)	AWG #20	AWG #16	AWG #26	AWG #26	AWG #26	AWG #16	AWG #26
	Sectional area	0.5	1.25	0.14	0.14	0.14	1.25	0.14
	Diameter (mm)	ϕ0.98	ϕ1.5	ϕ0.48	ϕ0.48	ϕ0.48	ϕ1.5	ϕ0.48
Insulator	Diameter (mm)	ϕ1.5 (Standard)	ϕ2.1 (Standard)	ϕ0.88 (Standard)	ϕ0.9 (Standard)	ϕ0.9 (Standard)	ϕ2.1 (Standard)	ϕ0.95 (Standard)
	Thickness (mm)	0.26	0.3	0.2	0.21	0.21	0.3	0.24
Shield	Material	Soft copper wire	Soft copper wire	Soft copper wire	Soft copper wire	Soft copper wire	Soft copper wire	
	Density	85%	80%	85%	80%	80%	80%	
	Diameter (mm)	ϕ3.6	ϕ5.5	ϕ3.4	ϕ4.2	ϕ5.1	ϕ6.7	
Jacket	Diameter (mm)	ϕ5±0.2	ϕ7.3±0.2	ϕ5±0.2	ϕ7.3±0.2	ϕ8.7±0.2	ϕ8.7±0.2	

NOTES :

NOTES :

USA:
HIROSE ELECTRIC (U.S.A.), INC. Headquarters
2688 Westhills Court, Simi Valley, CA 93065-6235
Phone : 1-805-522-7958
Fax : 1-805-522-3217
http://www.hiroseusa.com

USA:
HIROSE ELECTRIC (U.S.A.), INC. North California Office
20400 Stevens Creek Blvd., Ste 250, Cupertino, CA 95014
Phone : 1-408-253-9640
Fax : 1-408-253-9641
http://www.hiroseusa.com

USA:
HIROSE ELECTRIC (U.S.A.), INC. Detroit Office (Automotive)
37677 Professional Center Drive, Suite #100C
Livonia, MI 48154
Phone : 1-734-542-9963
Fax : 1-734-542-9964
http://www.hiroseusa.com

GERMANY:
HIROSE ELECTRIC EUROPE B.V. GERMAN BRANCH
Herzog-Carl-Strasse 4 D-73760 Ostfildern
(Scharnhauser Park)
Phone : 49-711-4560-02-1
Fax : 49-711-4560-02-299
http://www.hirose.de

THE NETHERLANDS:
HIROSE ELECTRIC EUROPE B.V.
Hogehillweg #8 1101 CC Amsterdam Z-O
Phone : 31-20-6557460
Fax : 31-20-6557469
http://www.hiroseeurope.com

UK:
HIROSE ELECTRIC EUROPE B.V. UK BRANCH
First Floor, St Andrews House, Caldecotte Lake Business Park, Milton Keynes MK7 8LE
Phone : 44-1908-369060
Fax : 44-1908-369078
http://www.hirose.co.uk

CHINA:
HIROSE ELECTRIC (SHANGHAI) CO., LTD. BEIJING BRANCH
A1001, Ocean International Center, Building 56# East 4th Ring Middle Road, Chao Yang District, Beijing, 100025
Phone : 86-10-5165-9332
Fax : 86-10-5908-1381
http://www.hirose-china.com.cn

CHINA:
HIROSE ELECTRIC (SHANGHAI) CO., LTD.
1601,Henderson Metropolitan,NO.300 ,East Nanjing Road,Huangpu District, Shanghai,China 200001
Phone : 86-21-6391-3355
Fax : 86-21-6391-3335
http://www.hirose-china.com.cn

CHINA:
HIROSE ELECTRIC TECHNOLOGIES (SHENZHEN) CO., LTD.
Room 09-13, 19/F, Office Tower Shun Hing Square, Di Wang Commercial Centre 5002, ShenNanDong Road, ShenZhen City, Guangdong Province, 518008
Phone : 86-755-8207-0851
Fax : 86-755-8207-0873
http://www.hirose-china.com.cn

HONG KONG:
HIROSE ELECTRIC HONGKONG TRADING CO., LTD.
Room 1001, West Wing, Tsim Sha Tsui Centre, 66 Mody Road, Tsim Sha Tsui East, Kowloon, Hong Kong
Phone : 852-2803-5338
Fax : 852-2591-6560
http://www.hirose-hongkong.com.hk

TAIWAN:
HIROSE ELECTRIC TAIWAN CO., LTD.
103 8F, No.87, Zhengzhou Rd., Taipei
Phone : 886-2-2555-7377
Fax : 886-2-2555-7350
http://www.hirose-taiwan.com.tw

SINGAPORE:
HIROSE ELECTRIC SINGAPORE PTE. LTD.
10 Anson Road #26-16 International Plaza 079903
Phone : 65-6324-6113
Fax : 65-6324-6123
http://www.hirose-singapore.com.sg

KOREA:
HIROSE KOREA CO., LTD.
1261-10, Jeoungwhang-Dong, Shihung-City, Kyunggi-Do 429-450
Phone : 82-31-496-7000,7124
Fax : 82-31-496-7100
http://www.hirose.co.kr

Creative Links to World Electronics ®

HRS

HIROSE ELECTRIC CO.,LTD.
5-23,OSAKI 5-CHOME,SHINAGAWA-KU,TOKYO 141-8587,JAPAN
PHONE: 81-3-3491-5300, FAX: 81-3-3495-5230
http://www.hirose.com
http://www.hirose-connectors.com

The contents of this catalog are current as of date of 05/2011. Contents are subject to change without notice for the purpose of improvements.