THIS DRAWING IS UNPUBLISHED. RELEASED FOR PUBLICATION -,- .
© COPYRIGHT - By - ALL RIGHTS RESERVED.

LOC	DIST
AD	00

REVISIONS

P	LTR	DESCRIPTION	DATE	DWN	APVD
	A1	REVISED PER ECO-11-005027	11MAR11	RK	HMR

1. RECEPTACLE ACCEPTS A .008-.014 THICK I.C. LEAD.
2. TUBE LOADED FOR AUTOMATIC INSERTION.
3. BECU CONTACT-PLATED WITH TWO .000030 MIN THK. GOLD STRIPES IN CONTACT AREA WITH TIN ON CONTACT LEGS, BALANCE OF CONTACT NICKEL PLATED.
4. PHOS. BRONZE CONTACT- PLATED WITH TWO .000015 MIN THK. GOLD STRIPES IN CONTACT AREA WITH TIN ON CONTACT LEGS, BALANCE OF CONTACT NICKEL PLATED.
5. MAXIMUM DIMENSION FOR I.C. SEATING PLANE.
6. HOUSING MATERIAL-GLASS FILLED THERMOPLASTIC, BLACK, 94V-0

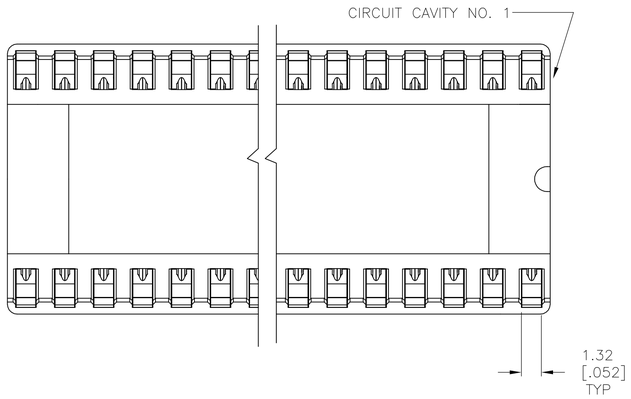

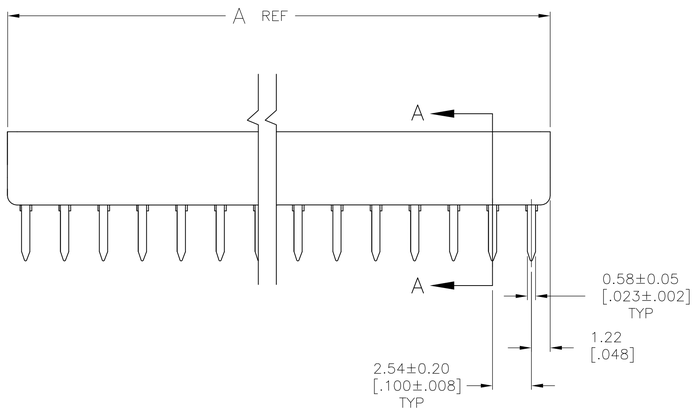

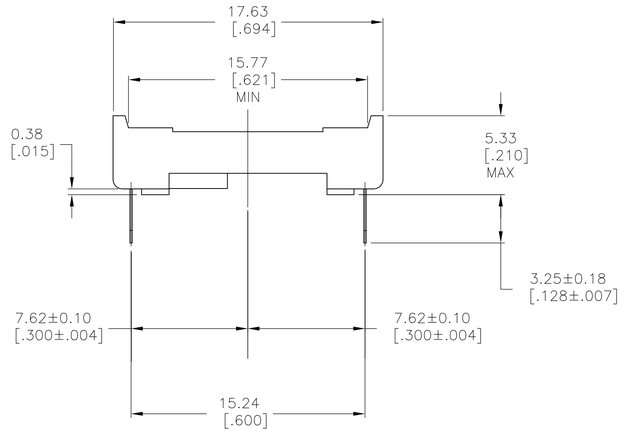

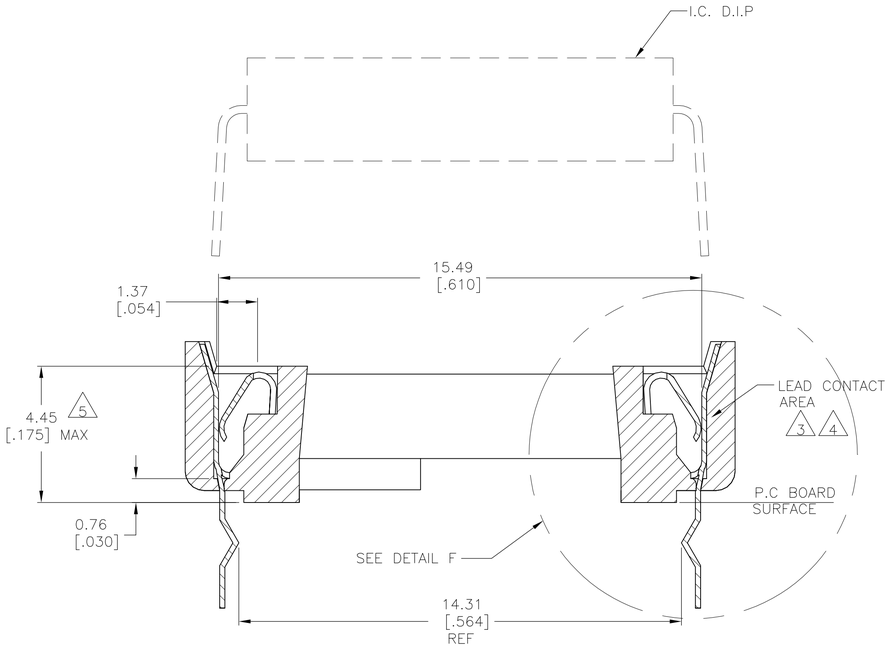

SECTION A-A
SCALE 10:1

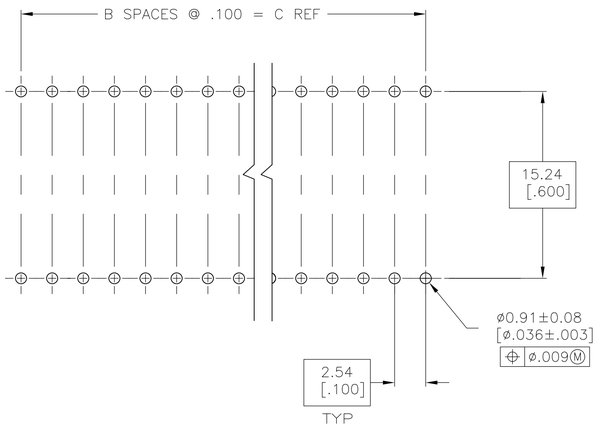

RECOMMENDED MOUNTING HOLE PATTERN
SCALE 4:1

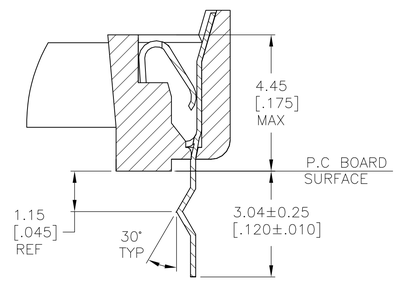

DETAIL F
SCALE 10:1

COMMENT	FINISH	DIM C	B SPCS	DIM A	POS	PART NO.
DETAIL F	3	1.500	15	40.51 [1.595]	32	3-1825276-2
DETAIL F	4	1.500	15	40.51 [1.595]	32	2-1825276-2
	3	1.500	15	40.51 [1.595]	32	1-1825276-2
	3	1.300	13	35.43 [1.395]	28	1-1825276-1
	4	1.500	15	40.51 [1.595]	32	1825276-2
	4	1.300	13	35.43 [1.395]	28	1825276-1

THIS DRAWING IS A CONTROLLED DOCUMENT.

DIMENSIONS: mm [INCHES]

TOLERANCES UNLESS OTHERWISE SPECIFIED:
0 PLC ± -
1 PLC ± -
2 PLC ± -
3 PLC ± 0.13 [.005]
4 PLC ± -
ANGLES ± -

MATERIAL: SEE TABLE
FINISH: SEE TABLE

DWN R. TALLEY 31OCT94
CHK R. TALLEY 31OCT94
APVD M.HUDDLESTON 31OCT94
PRODUCT SPEC 108-1066
APPLICATION SPEC 114-1052
WEIGHT -

TE Connectivity

NAME: SOCKET ASSY, DIP, OTC, HT DIPLOMATE

SIZE	CAGE CODE	DRAWING NO	RESTRICTED TO
A1	00779	C-1825276	-

CUSTOMER DRAWING | SCALE 5:1 | SHEET 1 OF 1 | REV A1

4805 (3/11)