FO-50360-L

PRODUCT CODE
CQ-L9904

REV	DOCUMENT	CHANGED BY	CHECK
4	200127	SAV 17MAR00	JAF
5	0005782	RJ 04JUN04	AK

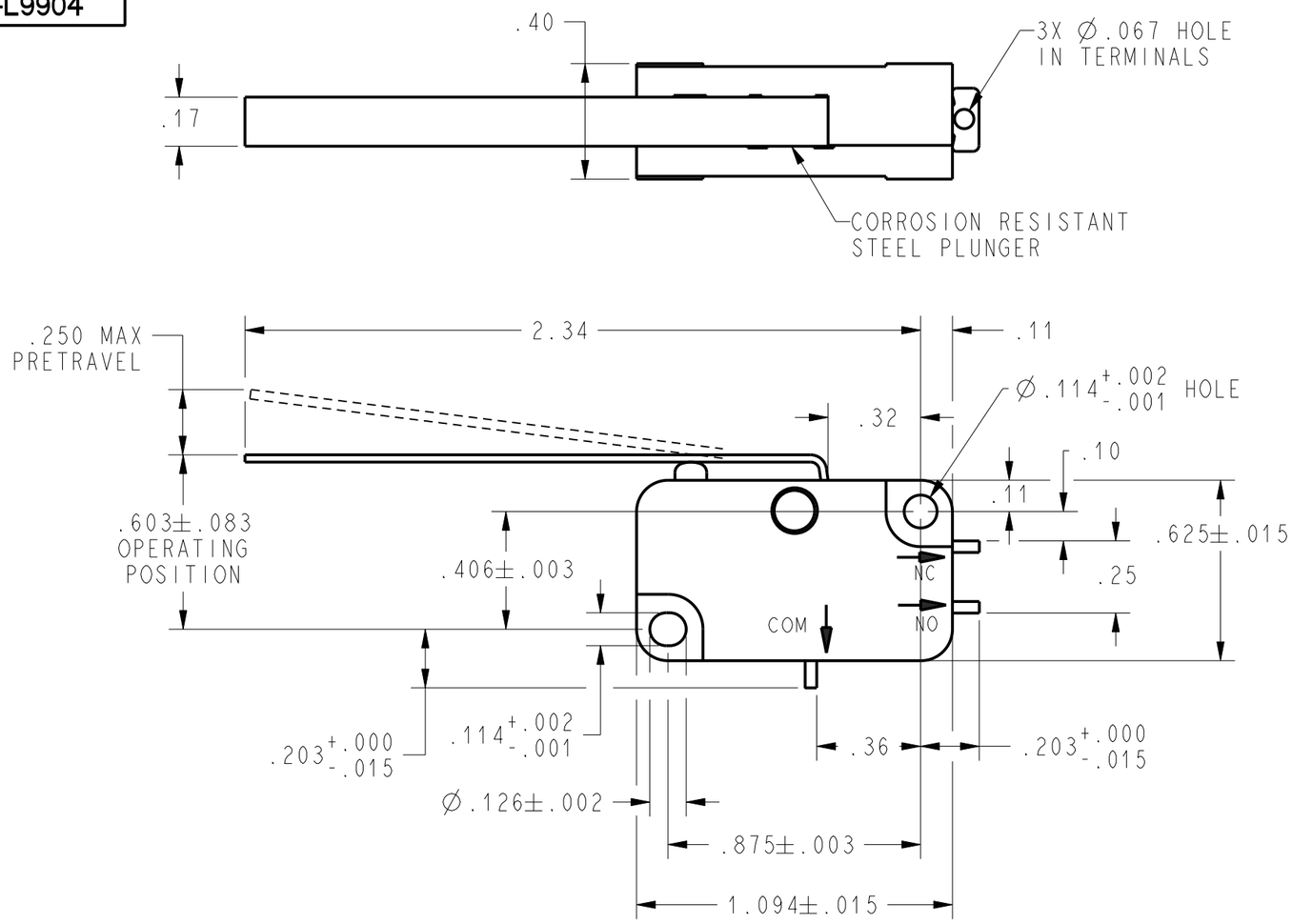

NOTES
1 - TERMINALS ARE PLATED FOR SOLDERING
2 - IN INSPECTION, DO NOT BURN OUT - GOLD CONTACTS
3 - IN INSPECTION, DO NOT EXCEED 10 VDC, .1A RESISTIVE LOAD
4 - INSPECT SWITCH RESISTANCE PER CONTROL PLAN

CHARACTERISTICS	
OPERATING FORCE	5 OZ MAX
RELEASE FORCE	1/2 OZ MIN
DIFFERENTIAL TRAVEL	.086 MAX
OVERTRAVEL	.092 MIN
RELEASE TRAVEL	.021 MIN

ELECTRICAL DATA

CONTACT ARRANGEMENT
S P D T

L22
1A 125 VAC

UNLESS OTHERWISE SPECIFIED TOLERANCES ARE: [X] US(inch) CUSTOMARY [ ] SI(mm) METRIC

NO PLACE	X	±.040	±1
ONE PLACE	.X	±.030	±0,4
TWO PLACE	.XX	±.015	±0,15
THREE PLACE	.XXX	±.005	±
ANGLES		±	±

RAW MATERIAL-COMMERCIAL STANDARD

THIRD ANGLE PROJECTION

DRAWN	SAV	17MAR00
CHECK	JAF	17MAR00

THIS DRAWING COVERS A PROPRIETARY ITEM AND IS THE PROPERTY OF HONEYWELL. THIS DRAWING IS NOT TO BE COPIED OR USED WITHOUT THE PERMISSION OF HONEYWELL.

DIMENSIONS ARE TO BE MET BEFORE PROTECTIVE COATINGS ARE APPLIED

PTC 2D | ASME Y14.5M-1994

Honeywell

TITLE
SWITCH - BASIC -

SIZE	DWG TYPE	DRAWING NAME	REV
B	M	V3L-1078	5

SCALE 2 : 1 | WEIGHT .015 LB | SHEET 1 OF 1