MICRO SWITCH
FREEPORT ILLINOIS U S A
A DIVISION OF HONEYWELL
FED. MFG. CODE 91929

SWITCH - ENCLOSED

CATALOG LISTING
1 EN219-R

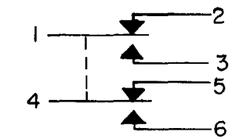

CIRCUIT DIAGRAM

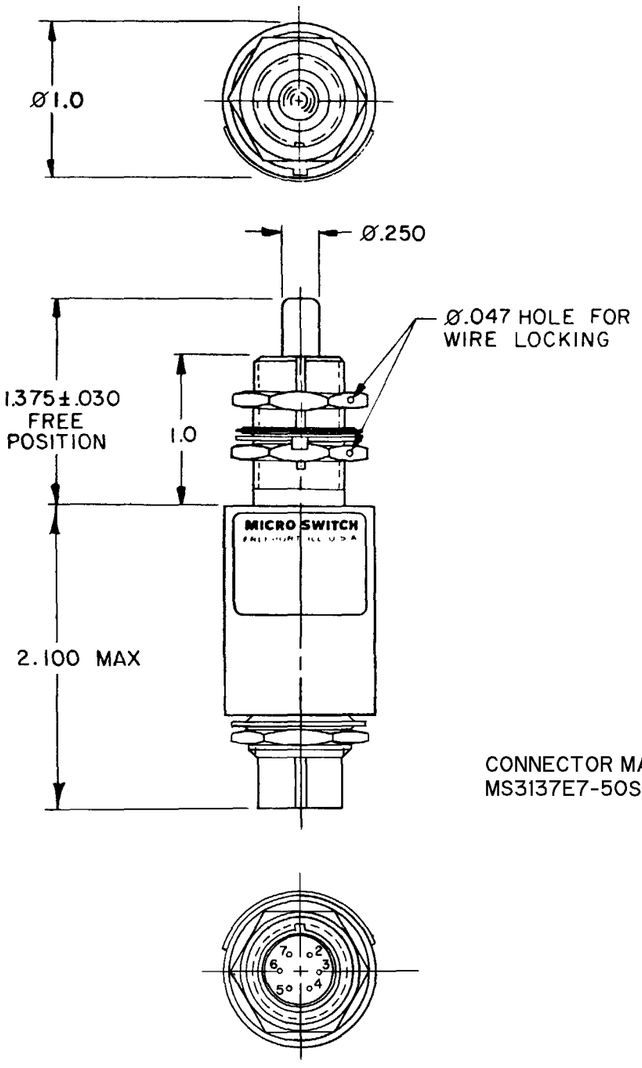

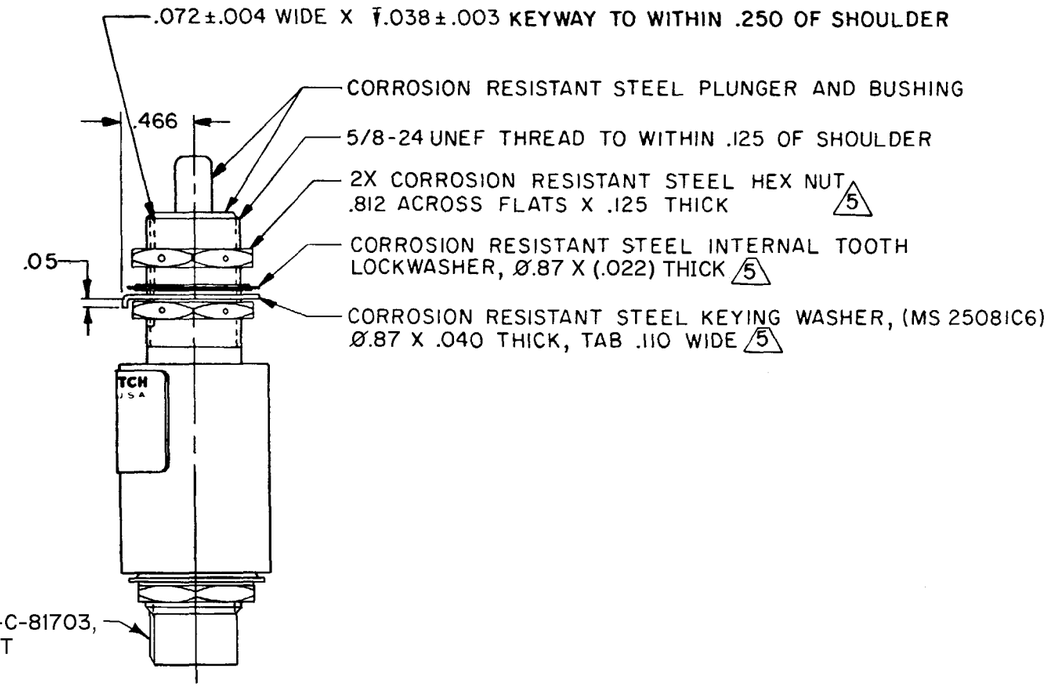

NOTES
1 - CORROSION RESISTANT STEEL ENCLOSURE
2 - SWITCH SEALED PER MIL-PRF-8805 SYMBOL 4
3 - CIRCUIT DIAGRAM AND CATALOG LISTING ARE SHOWN ON NAMEPLATE
4 - COINCIDENCE OF OPERATING AND RELEASING POINTS: .010 OF PLUNGER TRAVEL
5 HARDWARE MAY BE PACKAGED UNASSEMBLED PER MIL-PRF-8805

THIS DRAWING COVERS A PROPRIETARY ITEM AND IS THE PROPERTY OF MICRO SWITCH, A DIVISION OF HONEYWELL. THIS DRAWING IS NOT TO BE COPIED OR USED WITHOUT THE APPROVAL OF MICRO SWITCH.

THIRD ANGLE PROJECTION

SCALE FULL

DO NOT SCALE PRINT

TOLERANCES
APPLY TO DESIGN UNITS. CONVERSIONS ARE ONLY FOR REFERENCE. UNLESS NOTED, TOLERANCES ARE ±

	DIM. mm	TOL. mm/in	DIM. in	TOL. mm/in
NO PLACES	X	1/.04		
ONE PLACE	X.X	0.4/.016	X.X	0.8/.03
TWO PLACES	X.XX	0.15/.006	X.XX	0.38/.015
THREE PLACES			X.XXX	0.13/.005
ANGLES				

DESIGN UNITS SI METRIC ☐ US CUSTOMARY ■

RAW MATERIAL-COMMERCIAL STANDARD
MICRO SWITCH STANDARDS APPLY

DIMENSIONS ARE TO BE MET BEFORE PROTECTIVE COATINGS ARE APPLIED

WEIGHT 5.0 OZ MAX

ANSI Y14.5M-1982 APPLIES

CHARACTERISTICS	
OPERATING FORCE	6-12 LB
FULL OVERTRAVEL FORCE	30 LB MAX
RELEASE FORCE	4 LB MIN
PRETRAVEL	.040 MAX
DIFFERENTIAL TRAVEL	.020 MAX
OVERTRAVEL	.250 MIN

ELECTRICAL DATA

CONTACT ARRANGEMENT
2X SPDT

LOAD	28 VDC SEA LEVEL	28 VDC 50,000 FT.
RES	4	4
IND	2	2
MOTOR	4	

CATALOG LISTING 1EN219-R
PAGE 1 OF 1
ISSUE 15 M
RELEASE NO. SR-12307
REPLACES

REVISIONS
A CO 44351 PART 7 — WJM 29 MAR 79
B C047573 — J A P 5 AUG 80
C C048702 — G J W 4 DEC 80
D C080689 — J A S 25 JUN 98
E 200912 — C S L 1 AUG 00

CHECK
CHECK 17 APR 79
CHECK C E B 29 MAR 79
DRAWN WJM
RASTER

Mouser Electronics

Authorized Distributor

Click to View Pricing, Inventory, Delivery & Lifecycle Information:

Honeywell:
1EN219-R