THIS DRAWING IS UNPUBLISHED. RELEASED FOR PUBLICATION 20
© COPYRIGHT 20 BY - ALL RIGHTS RESERVED.

LOC	DIST
HM	00

REVISIONS

P	LTR	DESCRIPTION	DATE	DWN	APVD
	D	REV PER ECO-12-020241	20NOV2012	JM	MS

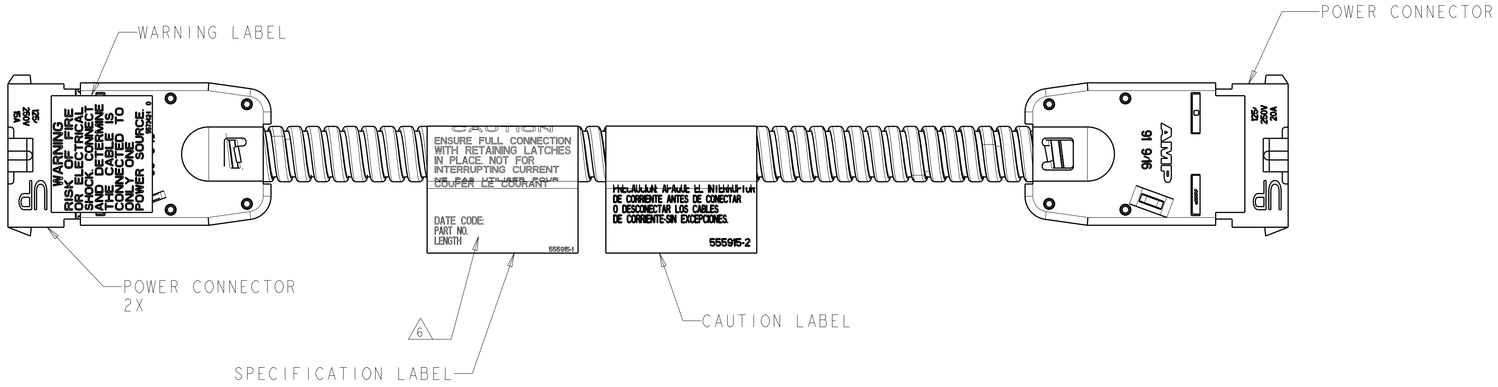

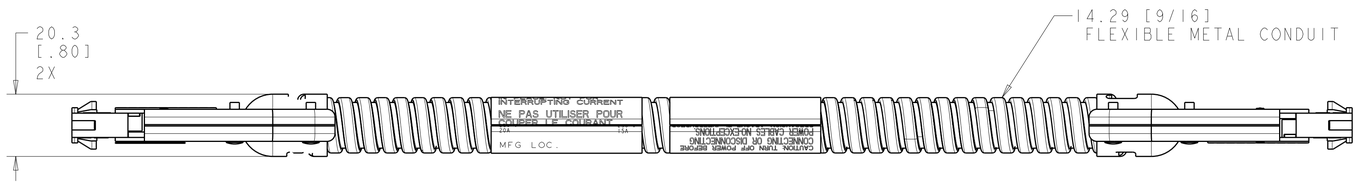

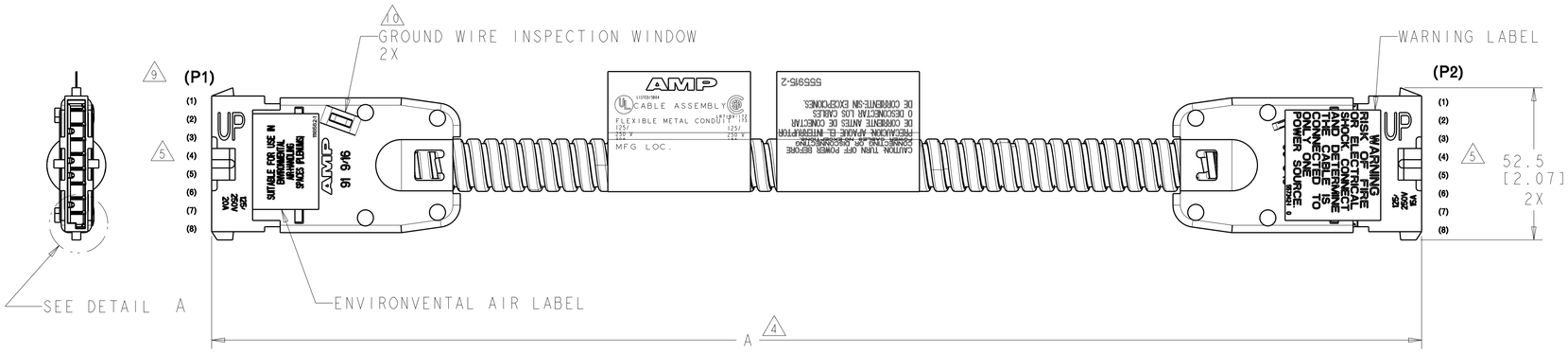

10 USE GROUND WIRE INSPECTION WINDOW TO VERIFY BONDING AND GROUNDING CONDUCTOR.

1. DIMENSIONS SHOWN ARE NOMINAL UNLESS OTHERWISE SPECIFIED.

2. CABLE ASSEMBLY IS WIRED PER WIRING DIAGRAM.

3. MATERIAL:

   CONNECTOR HOUSINGS- POLYCARBONATE, UL 94V-0 RATED, NEMA GRAY.

   STRAIN RELIEFS- CARBON STEEL WITH NICKEL PLATING 5.08µm [.000200] MINIMUM THICK.

   CONTACTS- COPPER ALLOY WITH SILVER PLATED STRIP 3.81µm [.000150] MINIMUM THICK.

4. DIMENSION A SHALL BE MEASURED WITH CONDUIT IN THE RELAXED POSITION.

5. DESIGNATIONS IN PARENTHESES ( ) ARE FOR REFERENCE ONLY.

6. MANUFACTURING LOCATION, DATE CODE, PART NUMBER AND LENGTH SHALL BE INK STAMPED APPROXIMATELY WHERE INDICATED.

7. APPLICATION: AMPINNERGY (TM) - MODULAR POWER DISTRIBUTION SYSTEM, A MANUFACTURED WIRING SYSTEM.

8. CABLE CONNECTOR MATES WITH DEDICATED NEUTRAL (3-3-2) LINE CONNECTOR CABLE ASSEMBLIES, JUNCTION BOXES, POWER STRIPS, ZONE DISTRIBUTION BOXES (ZDB) AND POWER DISTRIBUTION MODULES (PDM). KEYING FEATURE MAINTAINS CORRECT POLARITY OF MATING LINE CONNECTORS.

9. TABS FOR POSITIVE LATCHING TO MATING COMPONENTS.

10. USE GROUND WIRE INSPECTION WINDOW TO VERIFY BONDING AND GROUNDING CONDUCTOR.

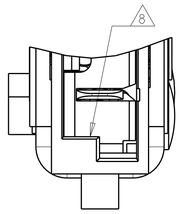

DETAIL A
SCALE 4:1
2X

WIRING DIAGRAM
8 WIRE, DEDICATED NEUTRAL (3-3-2)

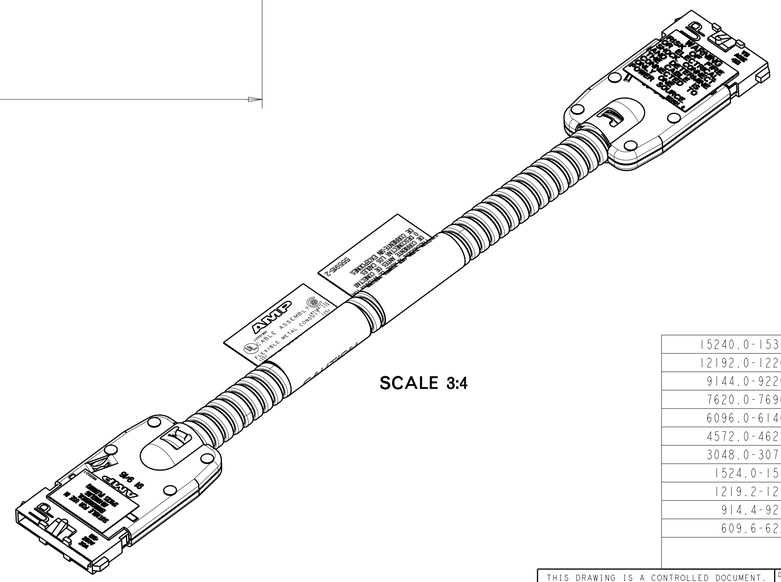

SCALE 3:4

A DIM 4	PART NUMBER	REF DIM
15240.0-15316.2 [600.00-603.00]	5-1933400-0	15.24 [50.00]
12192.0-12268.2 [480.00-483.00]	4-1933400-0	12.19 [40.00]
9144.0-9220.2 [360.00-363.00]	3-1933400-0	9.14 [30.00]
7620.0-7696.2 [300.00-303.00]	2-1933400-5	7.62 [25.00]
6096.0-6146.8 [240.00-242.00]	2-1933400-0	6.10 [20.00]
4572.0-4622.8 [180.00-182.00]	1-1933400-5	4.57 [15.00]
3048.0-3073.4 [120.00-121.00]	1-1933400-0	3.05 [10.00]
1524.0-1543.0 [60.00-60.75]	1933400-5	1.52 [5.00]
1219.2-1231.9 [48.00-48.50]	1933400-4	1.22 [4.00]
914.4-927.1 [36.00-36.50]	1933400-3	0.91 [3.00]
609.6-622.3 [24.00-24.50]	1933400-2	0.61 [2.00]

THIS DRAWING IS A CONTROLLED DOCUMENT.

DIMENSIONS: mm [INCHES]

TOLERANCES UNLESS OTHERWISE SPECIFIED:
0 PLC ±-
1 PLC ±-
2 PLC ±-
3 PLC ±-
4 PLC ±-
ANGLES ±-
1

MATERIAL - - 3

FINISH - - 3

DWN J MCNEAL 19DEC2007
CHK S JONES 19DEC2007
APVD S JONES 19DEC2007

PRODUCT SPEC 108-1234
APPLICATION SPEC 114-6039
WEIGHT -

CUSTOMER DRAWING

TE Connectivity

NAME CABLE ASSEMBLY, POWER TO POWER 3-3-2 -

SIZE	CAGE CODE	DRAWING NO	RESTRICTED TO
A1	00779	C-1933400	-

SCALE 1:1 SHEET 1 OF 1 REV D

4805 (3/11)

Mouser Electronics

Authorized Distributor

Click to View Pricing, Inventory, Delivery & Lifecycle Information:

TE Connectivity Divested:

1933400-2