REV.	DATE	ECR NO.	DESCRIPTION
A	06/05/03	XXXXXX	UPDATE DRAWING FORMAT
B	05/08/07	XXXXXX	REVISE BARREL, FERRULE DIMENSIONS
C	02/11/10	2022	REMOVE NOTE 2

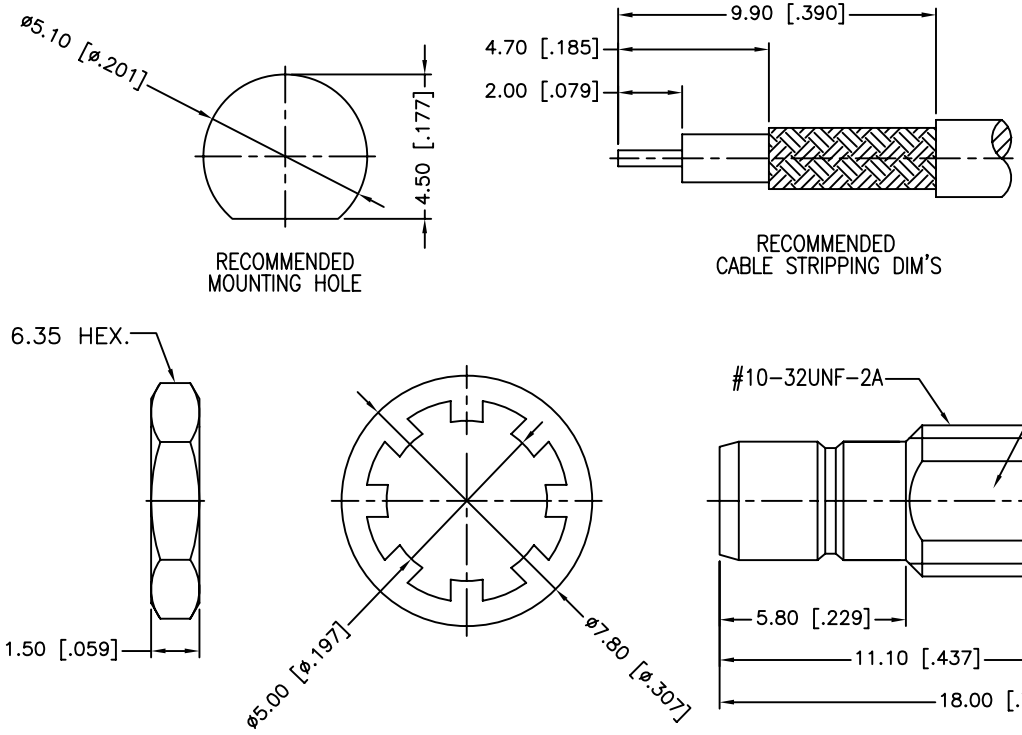

NTOE:
1. CRIMPED FERRULE HEX CRIMP SIZE .128"
2. MAX. PANEL THICKNESS=2.4mm

	DESCRIPTION	MATERIAL	FINISH	QTY
8	HEAT SHRINK TUBING		BLACK	1
7	HEX NUT	BRASS	GOLD	1
6	LOCK WASHER	BRASS	GOLD	1
5	FERRULE	BRASS	GOLD	1
4	CONTACT PIN	BRASS	GOLD	1
3	BARREL	BRASS	GOLD	1
2	INSULATOR	PTFE	NATURAL	2
1	BODY	BRASS	GOLD	1

UNLESS OTHERWISE SPECIFIED DIMENSIONS ARE IN MILLIMETERS. DIMENSIONS IN [ ] ARE IN INCHES AND FOR CUSTOMER REFERANCE ONLY.

UNLESS OTHERWISE SPECIFIED TOLERANCES FOR MILLIMETERS ARE:
0.5 – 8mm ± 0.20mm
8 – 30mm ± 0.40mm
30 – 120mm ± 0.50mm

UNLESS OTHERWISE SPECIFIED TOLERANCES FOR INCHES ARE:
.020 – .315 = ± 0.007"
.315 – 1.180 = ± 0.015"
1.180 – 4.724 = ± 0.020"

DO NOT SCALE DRAWING

APPROVALS		DATE
DRAWN	TANGOR	02/11/10
CHECKED		
ISSUED		
SHEET	1 OF 1	

CAD FILE C:/CONNEX/142191.DWG

Amphenol Connex

PART DESCRIPTION
SMB BULKHEAD CRIMP JACK
(FOR RG-174/U, 188A/U, 316/U)

PART NO. 142191

DWG. NO. 142191.DWG | REV. C | SIZE A | SCALE NA