APPROVED BY	DATE:	REV
Carlestubs	7-10-90	4

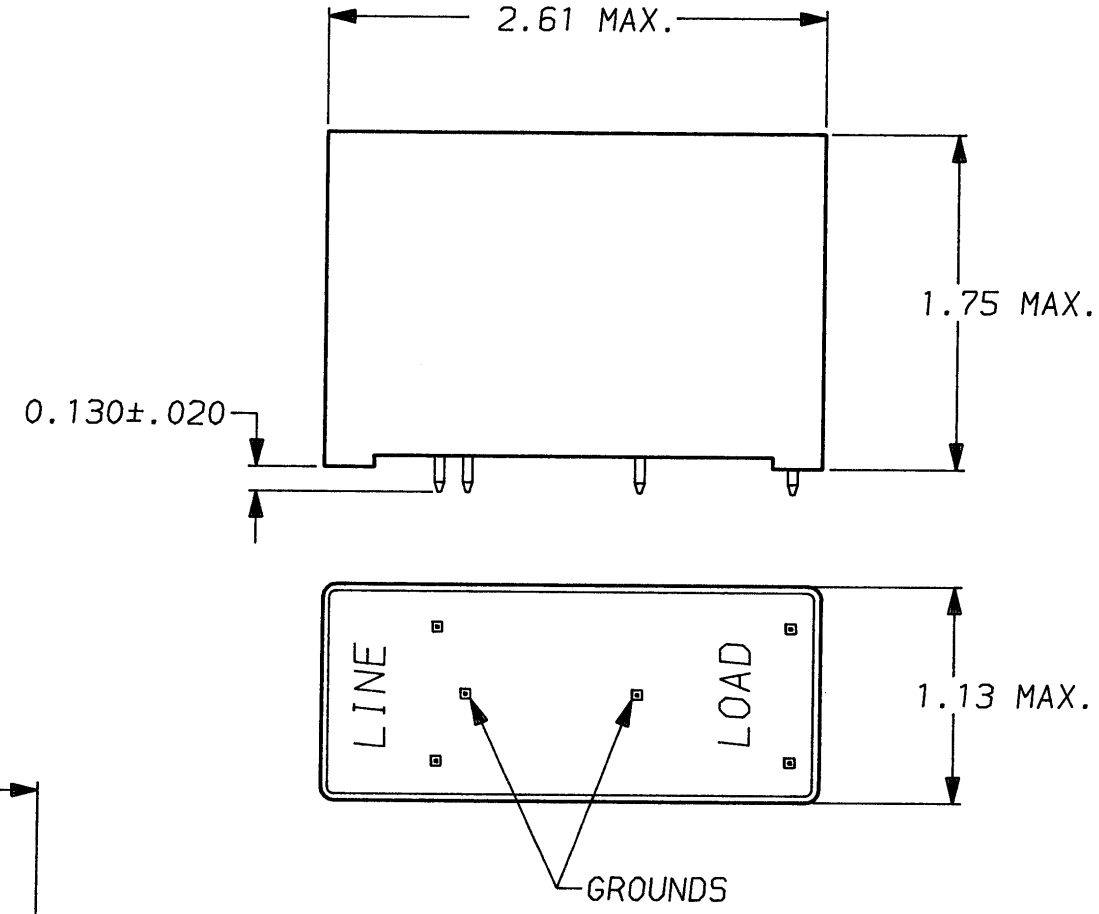

PINS: .065 MAX. DIAGONAL
(6 PLACES)

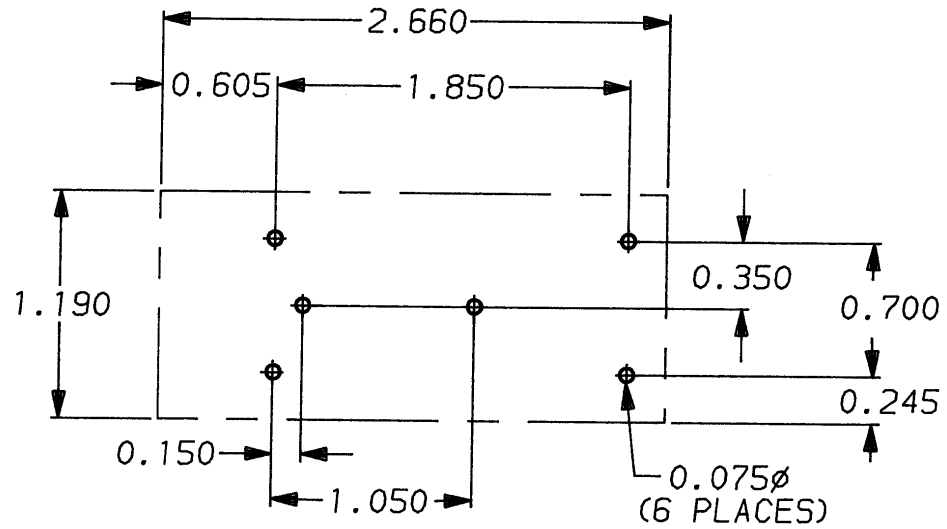

RECOMMENDED MOUNTING HOLES & CLEARANCE AREA
TOLERANCE UNLESS OTHERWISE SPECIFIED: ±.006

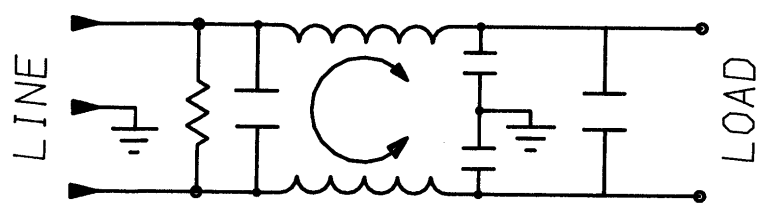

SAFETY ORGANIZATION(S):

THIS FILTER HAS BEEN FORMALLY RECOGNIZED, CERTIFIED OR APPROVED BY THE LISTED AGENCY. THEREFORE, ALL TEST/REQUIREMENTS SPECIFIED IN THE LATEST REVISION OF THE FOLLOWING AGENCY STANDARDS HAVE BEEN MET:

UL RECOGNIZED	UL 1283
CSA CERTIFIED	CSA 22.2, NO.0,0.4,8
VDE APPROVED	VDE 565-3

OPERATING SPECIFICATIONS:

LINE VOLTAGE/CURRENT:	4 AMP., 120/250 VAC
	3 AMP./40°C, 250 VAC
LINE FREQUENCY:	50-60Hz
MAX. LEAKAGE CURRENT, EACH LINE TO GROUND	.3mA @ 120V 60Hz
	.5mA @ 250V 50Hz
OPERATING AMBIENT TEMP. RANGE:	-10°C TO +60°C @ RATED CURRENT, I_r

IN AN AMBIENT, T_a, HIGHER THAN 60°C, THE MAXIMUM OPERATING CURRENT, I_o, IS AS FOLLOWS:

$$I_o = I_r \sqrt{\frac{85-T_a}{25}}$$

RELIABILITY SPECIFICATIONS:

STORAGE TEMPERATURE:	-40°C TO +85°C
HUMIDITY:	21 DAYS @ 40°C 95% RH
CURRENT OVERLOAD TEST:	6 TIMES RATED CURRENT FOR 8 SECONDS

TEST SPECIFICATIONS:

INDUCTANCE:	4.68mH NOMINAL
CAPACITANCE: (MEASURED @ 1 KHz, 0.25 VAC MAX., 25°C ±1°C)	
LINE TO GROUND:	8000pF ±20%
LINE TO LINE:	0.43µF ±20%
DISCHARGE RESISTOR:	560 KΩ
LINE/GROUND AND LINE/LINE INSULATION RESISTANCE (WITHOUT DISCHARGE RESISTOR)	6000 MΩ (MIN) AT 100 VDC 20°C AND 50% RH

RECOMMENDED RECEIVING INSPECTION HIPOT:

LINES TO GROUND:	2250 VDC FOR 1 MINUTE
LINE TO LINE:	1450 VDC FOR 1 MINUTE

FILTER APPROVAL:

THE BEST WAY TO SELECT AND QUALIFY A FILTER IS FOR YOUR ENGINEERING TO TEST THE UNIT IN YOUR EQUIPMENT.

50Ω - 50Ω (MINIMUM) INSERTION LOSS

FREQUENCY MHz	.01	.05	.07	.15	.50	1	5	10	30
COMMON dB	5	18	21	28	45	40	40	40	36
DIFF. dB	—	6	18	41	67	75	70	65	55

TOLERANCE EXCEPT AS NOTED
DECIMAL: .XXX .XX .X ANGLES
ENGLISH: ±.025 ± 1°
METRIC: ± —

MATERIAL: AS SUPPLIED

FINISH:

corcom
LIBERTYVILLE, IL 60048

POWER LINE FILTER

SCALE	DATE	DRG. NO.	REV.
NTS	2-8-87	4EYP.	04
DRW. BY LJD	ORIGINATOR CFW		

This document is proprietary to CORCOM INC. and is not to be reproduced nor used for manufacturing purposes except on CORCOM's order or prior written consent.