THIS COPY IS PROVIDED ON A RESTRICTED BASIS AND IS NOT TO BE USED IN ANY WAY DETRIMENTAL TO THE INTERESTS OF PANDUIT CORP.

D

PANDUIT PART NUMBER	WEIGHT
FT2X2	0.45 LB/EACH (206g/EACH)

H

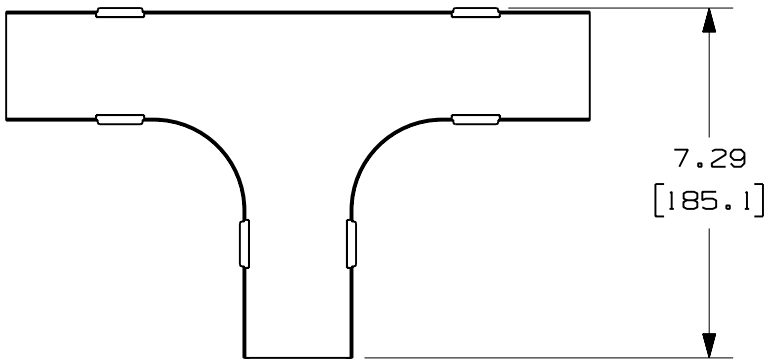

I NOTES:

1. SEE CURRENT CATALOG FOR ADDITIONAL PART SUFFIXES TO INDICATE COLOR AND/OR PACKAGE QUANTITY.
2. THE FIBER-DUCT 2x2 AND FIBERRUNNER 2x2 HORIZONTAL TEE FITTING IS DESIGNED WITH A MINIMUM 2" (50.8) BEND RADIUS TO PROTECT FIBER OPTIC CABLES.
3. DIMENSIONS IN PARENTHESES ARE IN METRIC.

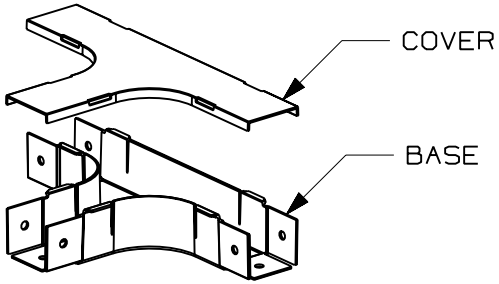

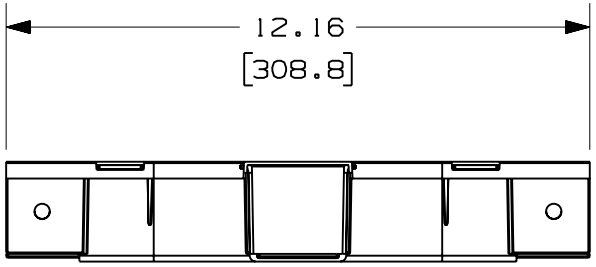

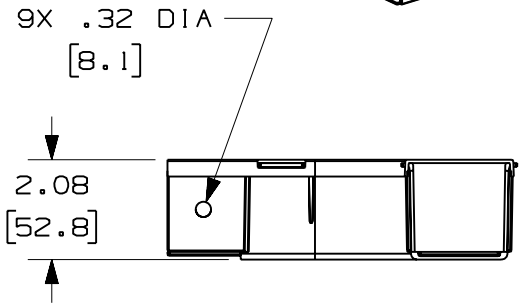

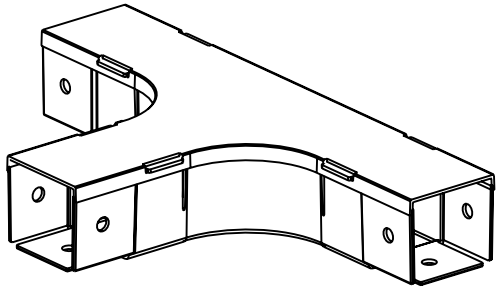

ENG. REF.: D35245CI_DC_FT2X2_04.prt

CAD FILENAME/LAYERS

E FT2X2.pdf

REV	DATE	BY	CHK	DESCRIPTION	ECN	-	R	CUST	SUP	GMBH
-	--------	---	--	I. REVISED GENERAL NOTES. H. REVISED PART WEIGHT.	--------		--	--		
-	--------	---	--	G. REVISED MATERIAL. F. REVISED DRAWING TITLE.	--------		--	--		
4	12-28-06	MSO	RN	E. REVISED CAD FILENAME. D. REVISED AND REDRAWN.	35245-35		RN	RN		

PANDUIT CORP TINLEY PARK, ILLINOIS

FIBER-DUCT 2x2 AND FIBERRUNNER 2x2 HORIZONTAL TEE FITTING (FT2X2)

F CUSTOMER DRAWING

UNLESS OTHERWISE SPECIFIED, DIMENSIONAL TOLERANCES ARE:
(.X) ± (.XXX) ±
(.XX) ±.03 (.8) ANGLES ±

UNLESS OTHERWISE SPECIFIED, ALL DIMENSIONS ARE GIVEN IN INCHES, THIRD ANGLE PROJECTION.

DRAWN BY: JBA
MAT'L: ABS
SCALE: NONE
DATE: 6-17-97
CHK'D: HIW
G
DRAWING NO.: 35245-35
DWG SIZE: A