PART NAME	FIBERGLASS NEMA BOX	PART No.	NF-6610	REVISION DATE	8/12/2010

BODY

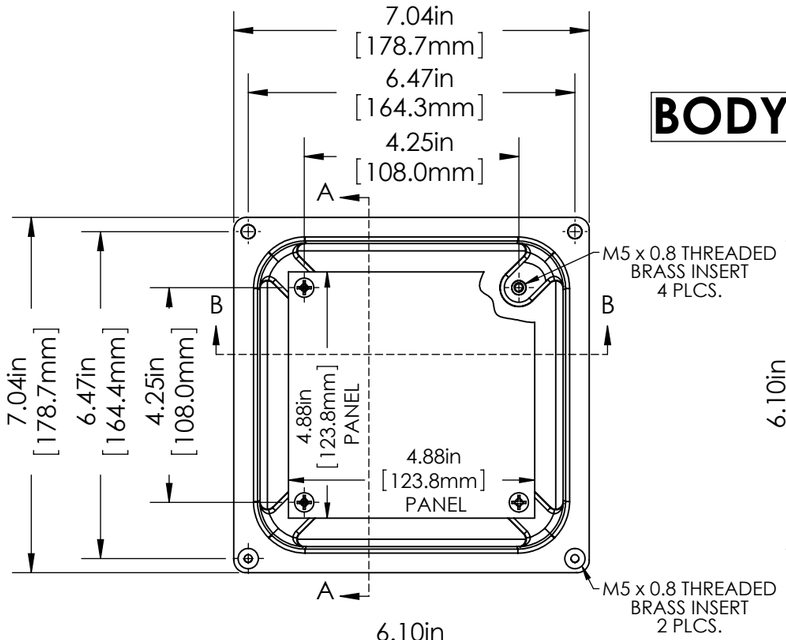

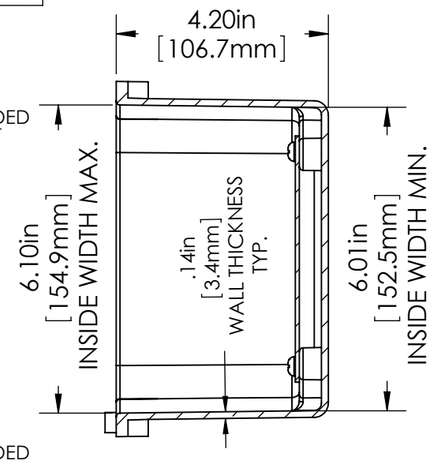

SECTION A-A

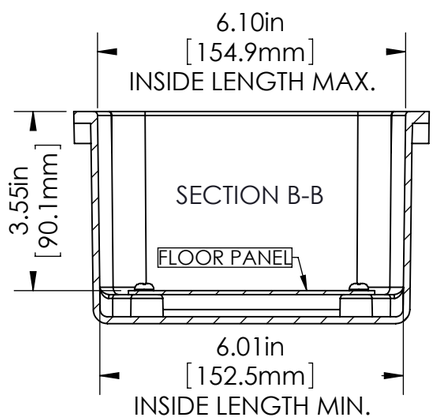

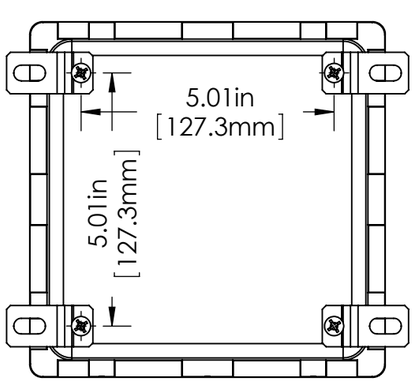

COVER

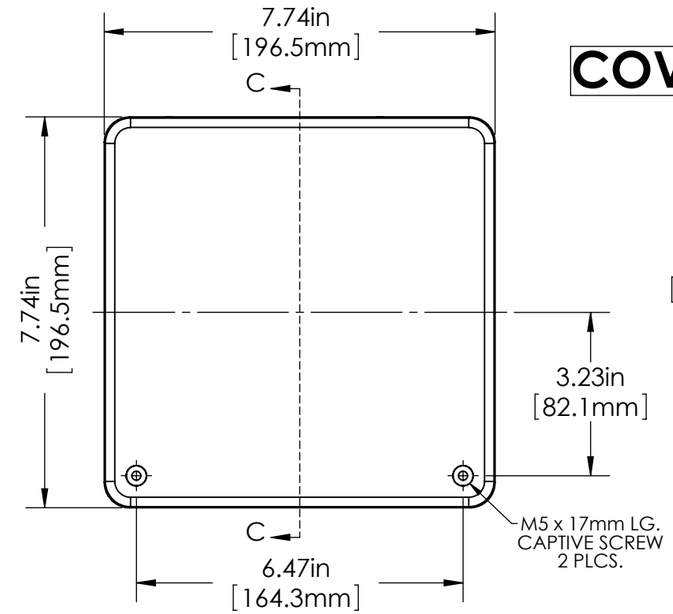

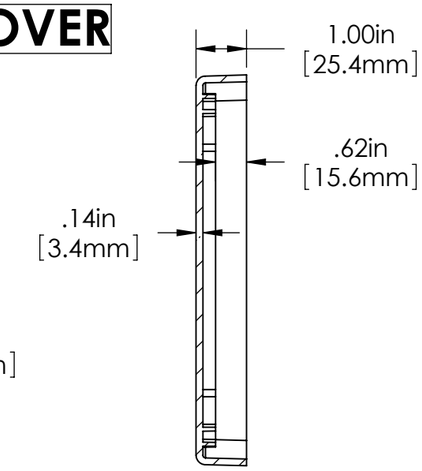

SECTION C-C

ASSEMBLY

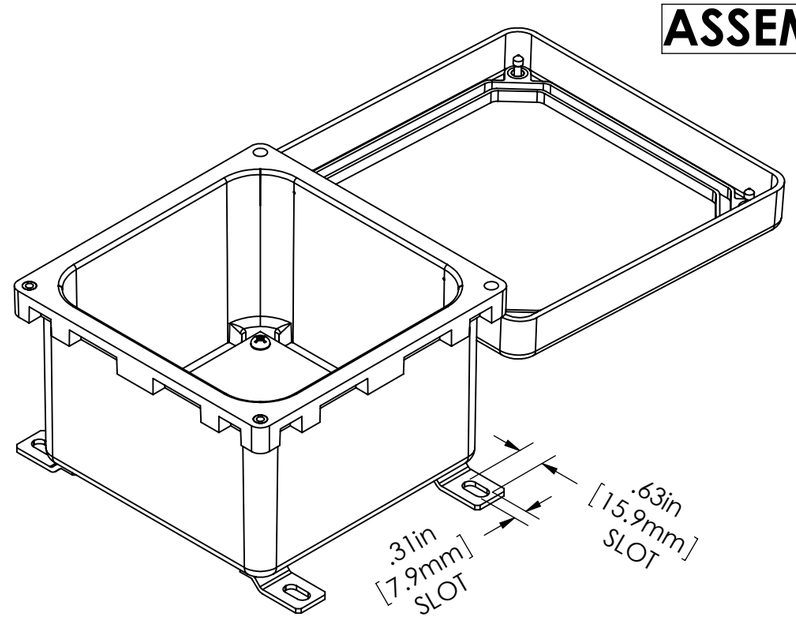

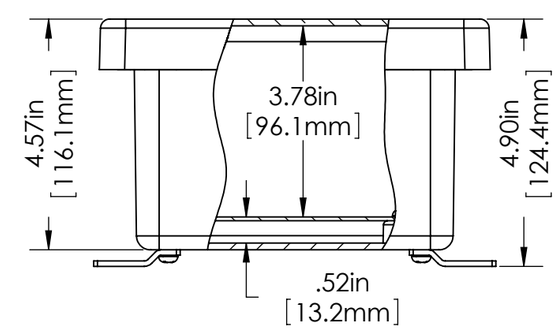

NOTE:
WALL MOUNTING BRACKETS AND SCREWS SUPPLIED - UNASSEMBLED.

TOLERANCES: ±.02" (0.5mm) [UNLESS OTHERWISE SPECIFIED]

MATERIAL:
BODY & COVER - FIBERGLASS REINFORCED POLYESTER (SMC)
PANEL - 14 GA. (2mm) THK. COLD ROLLED STEEL
MOUNTING BRACKETS - 12 GA. (2.5mm) 304 STAINLESS STEEL
HINGE - 18 GA. (1.2mm) THK. 304 STAINLESS STEEL
GASKET - SILICONE SPONGE

FINISH:
BODY & COVER - LIGHT GREY
PANEL - WHITE POLYESTER POWDER COAT
MOUNTING BRACKETS & HINGE - NATURAL