Feb.1.2018 Copyright 2018 HIROSE ELECTRIC CO., LTD. All Rights Reserved.

	COUNT	DESCRIPTION OF REVISIONS	BY	CHKD	DATE		COUNT	DESCRIPTION OF REVISIONS	BY	CHKD	DATE
△					. .	△					. .
△					. .	△					. .
△					. .	△					. .

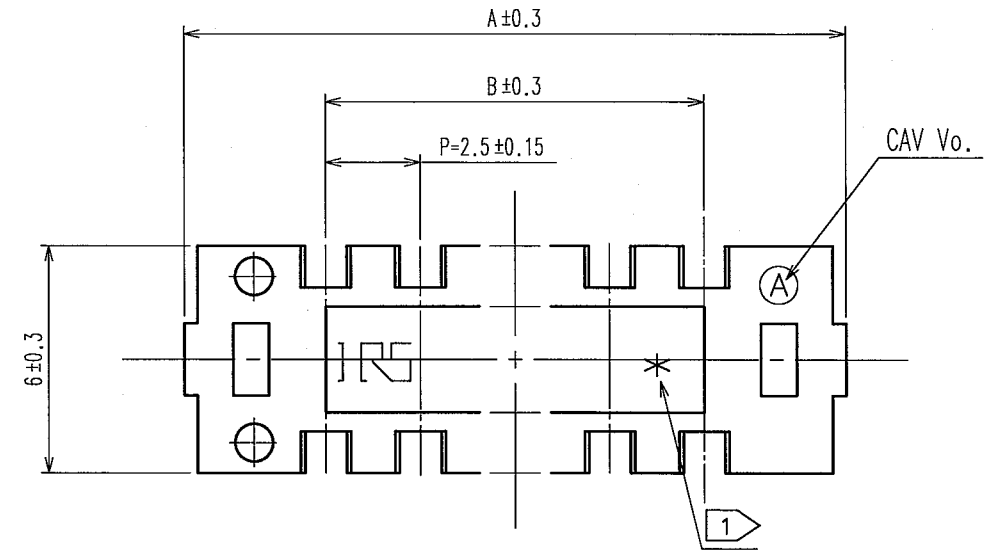

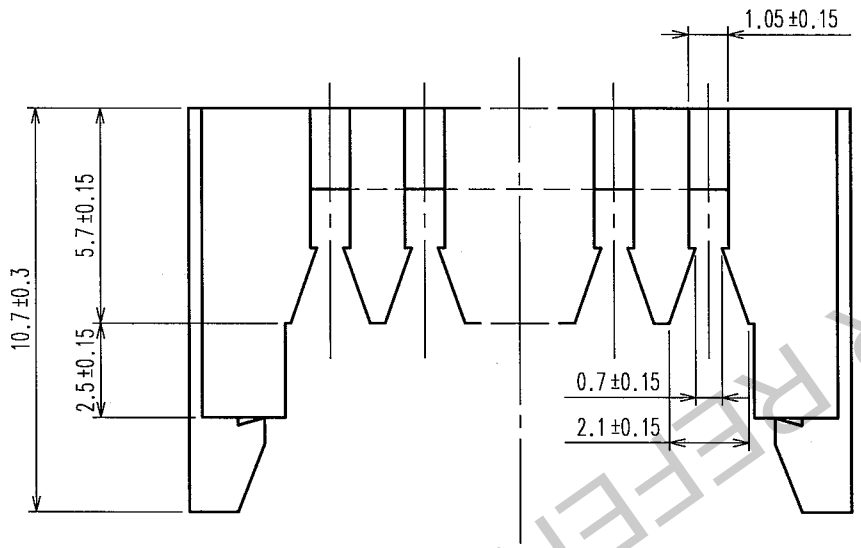

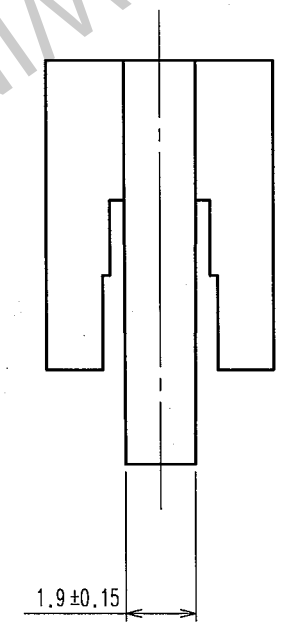

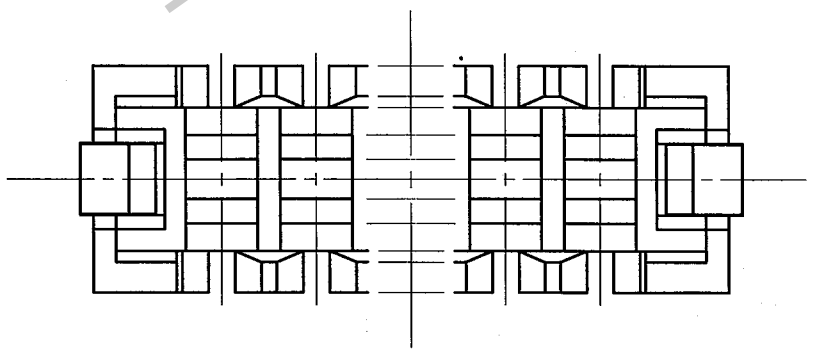

CODE No	PART No	NUMBER OF CONTACT	A	B
CL541-0096-6	DF1- 2A1.05	2	10.0	2.5
CL541-0097-9	DF1- 3A1.05	3	12.5	5.0
CL541-0098-1	DF1- 4A1.05	4	15.0	7.5
CL541-0099-4	DF1- 5A1.05	5	17.5	10.0
CL541-0100-1	DF1- 6A1.05	6	20.0	12.5
CL541-0101-4	DF1- 7A1.05	7	22.5	15.0
CL541-0102-7	DF1- 8A1.05	8	25.0	17.5
CL541-0103-0	DF1- 9A1.05	9	27.5	20.5
CL541-0104-2	DF1-10A1.05	10	30.0	22.5
CL541-0105-5	DF1-11A1.05	11	32.5	25.0
CL541-0106-8	DF1-12A1.05	12	35.0	27.5
CL541-0107-0	DF1-13A1.05	13	37.5	30.0
CL541-0108-3	DF1-14A1.05	14	40.0	32.5
CL541-0109-6	DF1-15A1.05	15	42.5	35.0
CL541-0110-5	DF1-16A1.05	16	45.0	37.5
CL541-0114-6	DF1-20A1.05	20	55.0	47.5

NOTES 1 NO, OF CONTACTS SHALL BE INDICATED EXCLUDING 2 AND 3 POSITIONS.
2 APPLICABLE CABLE:UL1007 AWG26,28.

HRS DRAWING FOR REFERENCE

NO.	MATERIAL	FINISH, REMARKS
1	POLYAMIDE	BROWN,UL94V-0

CODE NO.(OLD)

DRAWN	DESIGNED	CHECKED	APPROVED	RELEASED
A.Miura '05.12.26	R. Hirose '05.12.26	H. Umehara 05.12.28	T. Ono 05.12.28	. .

SCALE 5 : 1
UNITS mm

DRAWING NO. EDC3-162340-01

HRS HIROSE ELECTRIC CO., LTD

PART NO. DF1-*A1.05

CODE NO. CL541

1/1

FORM NO.229

TO