3M™ MetPak™ 2-FB Inverse Header

2 mm 5-Row, Right Angle, Solder Tail

MP2 Series

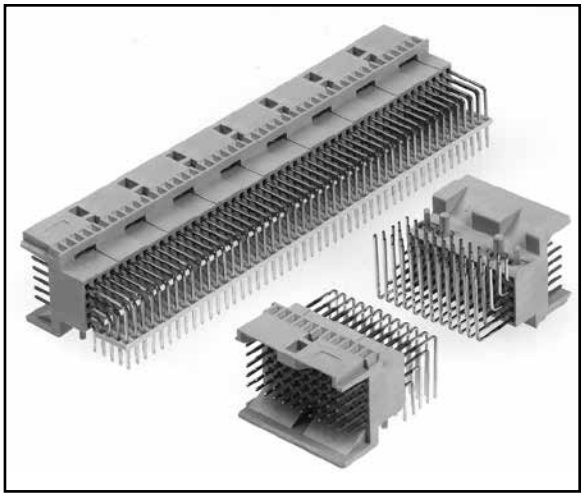

- Three levels of early mate, late break (EMLB)
- sequencing or selective loading options
- Footprint compatible with standard Futurebus+®
- Solder tail with true-position wafer
- Ideal for hot swapping applications
- End-to-end stackable
- Right angle male for daughter card
- Mates with MP2-R for backplane applications and MP2-SXXXG for coplanar applications
- RoHS Compliant. See the Regulatory Information Appendix (RIA) in the "RoHS compliance" section of www.3Mconnectors.com for compliance information (RIA E1 & C1 apply)

Date Modified: September 17, 2013

TS-1122-C
Sheet 1 of 4

Physical

Insulation:

Material: High Temp LCP

Flammability: UL 94V-0

Color: Beige

Contact:

Material: Copper Alloy

Plating:

Underplating: 50 µ" [1.27 µm] Nickel

Wiping Area: See Ordering Information

Solder Tails: See Ordering Information

Electrical

Current Rating: Signal: 1.5 A – All contacts simultaneously

Insulation Resistance: 10^3 MΩ

Withstanding Voltage: 1000 V_{AC}

Environmental

Temperature Rating: -55°C to +125°C

Process Temperature Rating: 260°C (Profile per J-STD-020C)

Moisture Sensitivity Level: 1 (per J-STD-020C)

UL File No.: E68080

MetPak is a trademark of 3M Company.
Futurebus+ is a registered trademark of the Institute of Electrical and Electronic Engineers, Inc. (IEEE)

3M™ MetPak™ 2-FB Inverse Header

2 mm 5-Row, Right Angle, Solder Tail

MP2 Series

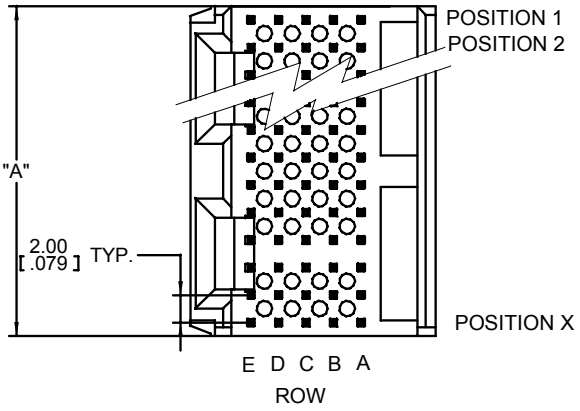

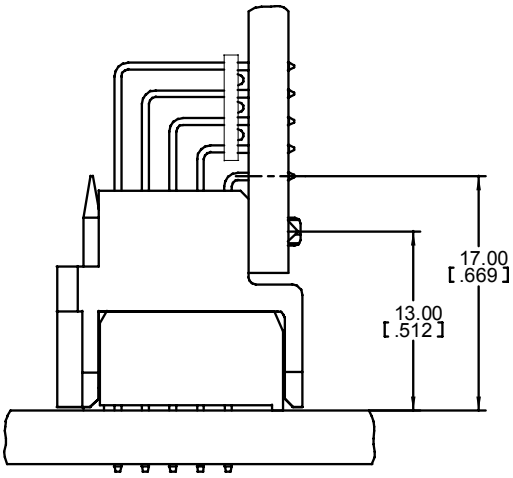

MATED WITH MP2-RXXX-5XXX-XXXX

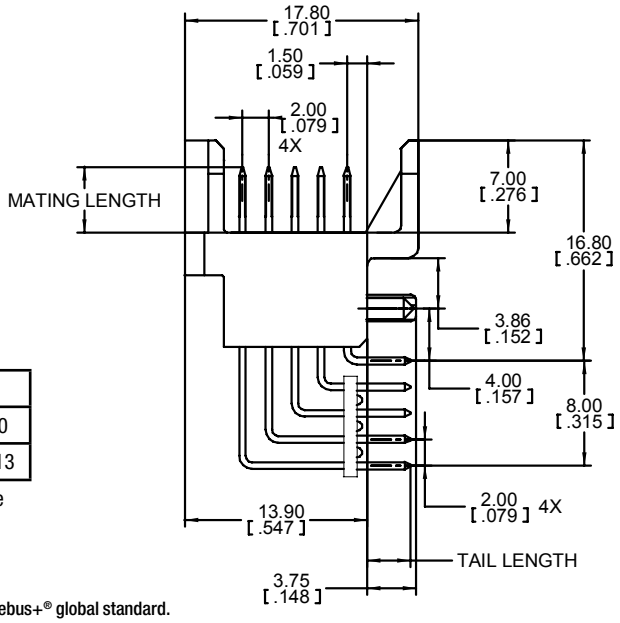

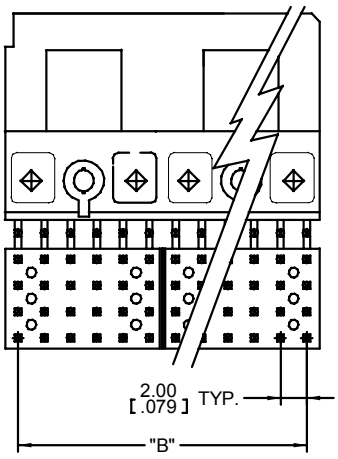

mm
[inch]

Tolerance Unless Noted			
	0	0.0	0.00
mm	±3	±0.3	±0.13

[ ] Dimensions for Reference Only

Notes:

1. Refer to IEC 61076-4-104 Futurebus+® global standard.
2. For special pin arrangements, contact 3M.

Ordering Information

MP2 - PXXX - 5XM1 - XXXXX

- P = Right Angle Header Inversed
- Pin Count (See Table 1)
- Rows: 5 = 5 Rows
- Loading Pattern and Tail Length (See Table 2)
- Termination Style: M = Solder Tail
- Plating Options (See Table 3)

TS-1122-C
Sheet 2 of 4

3M™ MetPak™ 2-FB Inverse Header

2 mm 5-Row, Right Angle, Solder Tail

MP2 Series

Table 1 - Connector & Row Lengths			
Pin Count	Dim. "A" mm [inch]	Dim "B" mm [inch]	Rows
030	11.95 [0.471]	10.00 [0.394]	5
060	23.95 [0.943]	22.00 [0.866]	5
090	35.95 [1.415]	34.00 [1.339]	5
120	47.95 [1.889]	46.00 [1.811]	5
150	59.95 [2.36]	58.00 [2.283]	5
180	71.95 [2.833]	70.00 [2.756]	5
210	83.95 [3.305]	82.00 [3.228]	5
240	95.95 [3.778]	94.00 [3.701]	5
270	107.95 [4.251]	106.00 [4.173]	5
300	119.95 [4.722]	118.00 [4.646]	5
420	167.95 [6.612]	166.00 [6.535]	5

Table 2 - Mate & Tail Lengths, mm vs. Loading Pattern											
Loading Pattern Code	Description	Mate Length Row A	Mate Length Row B	Mate Length Row C	Mate Length Row D	Mate Length Row E	Tail Length Row A	Tail Length Row B	Tail Length Row C	Tail Length Row D	Tail Length Row E
1	All Positions Filled	5.00	5.00	5.00	5.00	5.00	3.30	3.30	3.30	3.30	3.30
2	All Positions Filled	4.25	5.00	5.00	5.00	5.00	4.05	3.30	3.30	3.30	3.30
3	All Positions Filled	3.50	4.25	4.25	5.00	5.00	4.80	4.05	4.05	3.30	3.30
4	All Positions Filled	4.25	5.00	4.25	4.25	4.25	4.05	3.30	4.05	4.05	4.05
5	Rows A, B, C and D Filled	5.00	5.00	5.00	5.00	NA	3.30	3.30	3.30	3.30	NA
6	Rows A, B, C and D Filled	5.00	4.25	4.25	5.00	NA	3.30	4.05	4.05	3.30	NA
7	All Positions Filled	4.25	5.00	4.25	5.00	4.25	4.05	3.30	4.05	3.30	4.05
8	All Positions Filled	4.25	4.25	4.25	4.25	4.25	4.05	4.05	4.05	4.05	4.05
9	All Positions Filled	5.00	3.50	3.50	3.50	4.25	3.30	4.80	4.80	4.80	4.05
A	All Positions Filled	3.75	4.50	5.25	4.50	3.75	4.55	3.80	3.05	3.80	4.55
B	All Positions Filled	3.75	4.50	3.75	4.50	3.75	4.55	3.80	4.55	3.80	4.55
C	All Positions Filled	5.75	5.75	5.75	5.75	5.75	2.55	2.55	2.55	2.55	2.55
D	All Positions Filled	4.25	5.00	5.75	5.00	4.25	4.05.	3.30	2.55	3.30	4.05
E	All Positions Filled	5.00	5.75	5.75	5.75	5.00	4.05	4.05	4.05	4.05	4.05
G	Rows A, B, C and D Filled	5.00	4.25	4.25	5.00	NA	3.30	4.05	4.05	3.30	NA

Table 3 - Plating	
Plating Suffix	Plating Composition
KR (RIA E1 & C1 apply)	0.76 µm [30 µ"] Min. Au Contact Area
	2.54 µm [100 µ"] Min. Matt Whisker Mitigating Sn Tail Area
	1.27 µm [50 µ"] Min. Ni all over
LR (RIA E1 & C1 apply)	0.08 µm [3 µ"] Min. Au Contact Area
	0.67 µm [27 µ"] Min. PdNi Contact Area
	2.54 µm [100 µ"] Min. Matt Whisker Mitigating Sn Tail Area
	1.27 µm [50 µ"] Min. Ni all over

3M
Electronic Solutions Division
Interconnect Solutions
http://www.3Mconnectors.com

3M is a trademark of 3M Company.

For technical, sales or ordering information call
800-225-5373

3M™ MetPak™ 2-FB Inverse Header

2 mm 5-Row, Right Angle, Solder Tail

MP2 Series

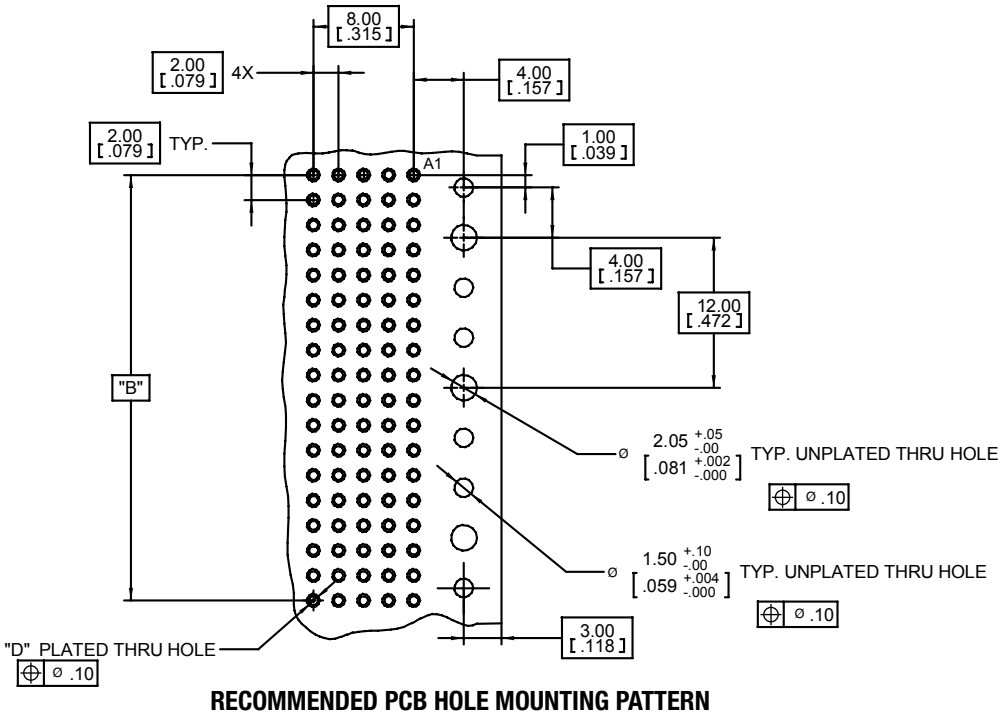

RECOMMENDED PCB HOLE MOUNTING PATTERN

Table 4 - HOLE PLATING FINISHES						
HOLE	**Finished Dia. MM [in]**	**Cu Thickness [mm [in]**	**Immersion Matte Sn Thickness microns [µ"]**	**Electrolytic Au Thickness microns [µ"]**	**OSP ENTEK Thickness microns [µ"]**	**Drilled Hole Dia. mm [in]**
"D"	0.700-0.800 [.0276-.0315]	0.025-0.045 [0.001-0.002]	0.5 - 2.5 [20 - 100]	0.1 - 0.5 [4 - 20]	0.2 - 0.5 [8 - 20]	0.830-0.860 [.0330-.0340] or 0.85 mm [#66] TWIST DRILL

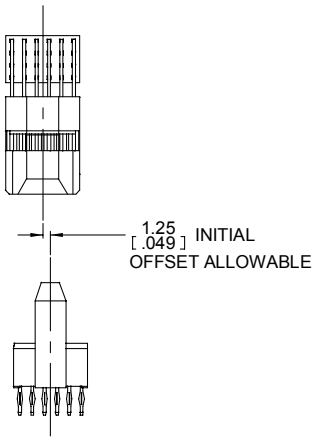

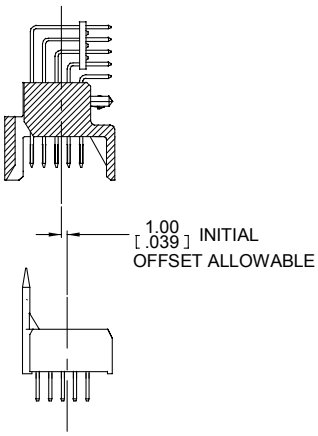

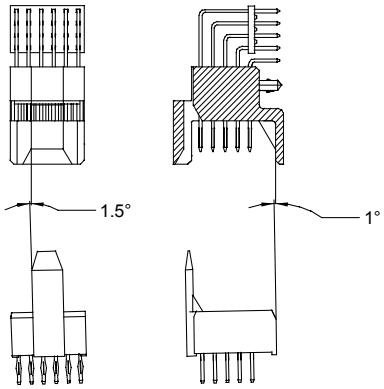

INCLINATION TOLERANCES

TS-1122-C
Sheet 4 of 4

3M is a trademark of 3M Company.

Important Notice

All statements, technical information, and recommendations related to 3M's products are based on information believed to be reliable, but the accuracy or completeness is not guaranteed. Before using this product, you must evaluate it and determine if it is suitable for your intended application. You assume all risks and liability associated with such use. Any statements related to the product which are not contained in 3M's current publications, or any contrary statements contained on your purchase order shall have no force or effect unless expressly agreed upon, in writing, by an authorized officer of 3M.

Warranty; Limited Remedy; Limited Liability.

This product will be free from defects in material and manufacture for a period of one (1) year from the time of purchase. **3M MAKES NO OTHER WARRANTIES INCLUDING, BUT NOT LIMITED TO, ANY IMPLIED WARRANTY OF MERCHANTABILITY OR FITNESS FOR A PARTICULAR PURPOSE.** If this product is defective within the warranty period stated above, your exclusive remedy shall be, at 3M's option, to replace or repair the 3M product or refund the purchase price of the 3M product. **Except where prohibited by law, 3M will not be liable for any indirect, special, incidental or consequential loss or damage arising from this 3M product, regardless of the legal theory asserted.**

3M Electronics Solutions Division
6801 River Place Blvd.
Austin, TX 78726-9000
U.S.A.
1-800-225-5373
www.3Mconnectors.com

Please recycle. Printed in USA.
© 3M 2013. All rights reserved.
RIA-2217B-E