GENERAL TOLERANCE										USED ON
10 MAX	30 MAX	50 MAX	70 MAX	100 MAX	120 MAX	250 MAX	250 OVR	ANGLE	ECCENT	
±0.15	±0.20	±0.30	±0.40	±0.50	±0.75	±0.90	±1.4	±0.5º	0.1	

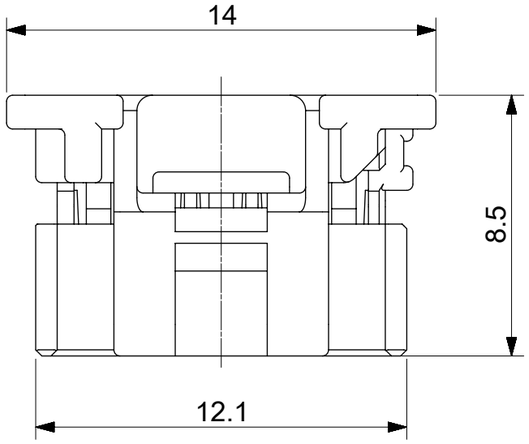

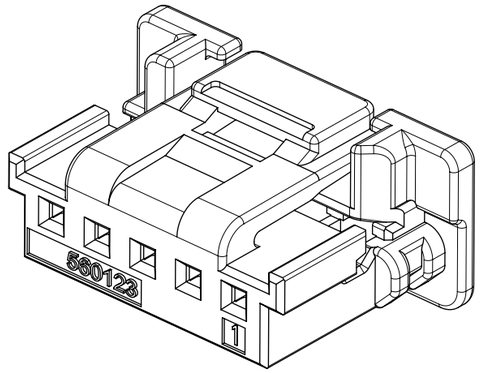

ISO VIEW

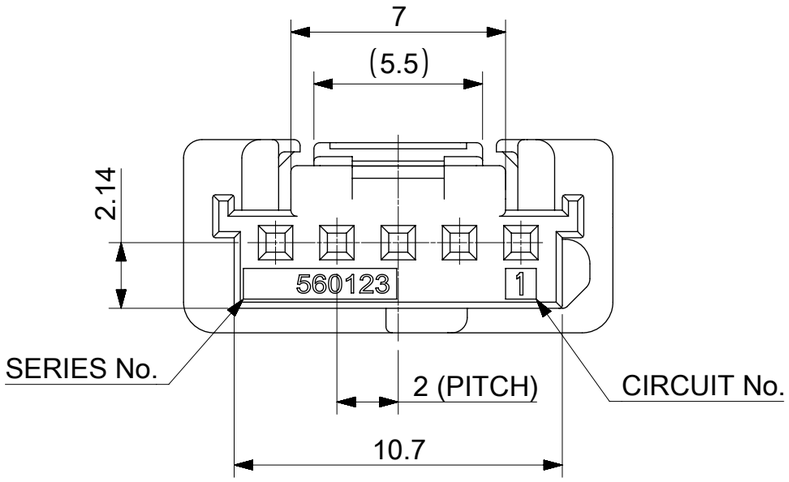

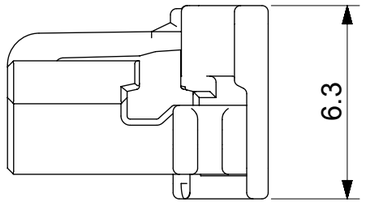

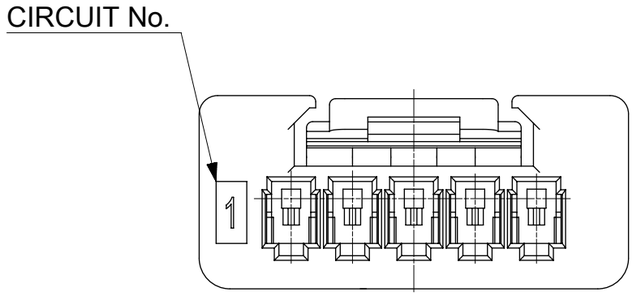

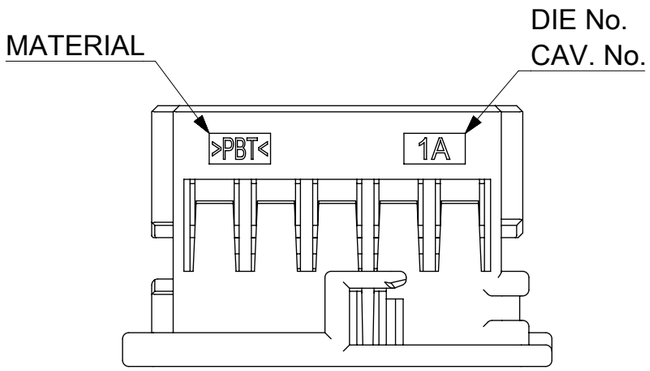

NOTES:
1. MATERIAL: POLYESTER(PBT), GLASS FILLES, UL94V-0
   COLOR: SEE TABLE
2. MATES WITH: 502352, 560020 SERIES
3. APPLICABLE TERMINAL: 560124-0101,560124-0131
4. APPLICABLE ISL: 560125-0500
5. GENERAL TOLERANCE: SEE TABLE
6. ELV AND RoHS COMPLIANT

ORDER NO	MATERIAL NO	COLOR
560123 - 0500	5601230500	WHITE
560123 - 0501	5601230501	BLACK

QUALITY SYMBOLS
FA = 0
FC = 0
FP = 0
▼ = 0
C = 0
☒ = 0
■ = 0
C = 0

THIS DRAWING CONTAINS INFORMATION THAT IS PROPRIETARY TO MOLEX ELECTRONIC TECHNOLOGIES, LLC AND SHOULD NOT BE USED WITHOUT WRITTEN PERMISSION

RELEASED
EC NO: 109134 2016/10/07
DRWN: SWYOON 2016/10/07
CHK'D: BCYOON 2016/10/07
APPR: JHJANG
REV A

GENERAL TOLERANCES (UNLESS SPECIFIED)
ANGULAR TOL ± °
4 PLACES ±
3 PLACES ±
2 PLACES ±
1 PLACE ±
0 PLACES ±
DRAFT WHERE APPLICABLE MUST REMAIN WITHIN DIMENSIONS

DIMENSION UNITS: MM
SCALE: 5:1
DRWN BY: SWYOON DATE: 2016/10/07
CHK'D BY: BCYOON DATE: 2016/10/07
APPR BY: DATE:
DRAWING SIZE: A3
THIRD ANGLE PROJECTION

molex®

NEW 2.0 PITCH W/B CONN. REC. 5WAY HSG
DURACLIK ISL SERIES

PRODUCT CUSTOMER DRAWING

SERIES	MATERIAL NUMBER	CUSTOMER
560123	SEE TABLE	

DOCUMENT NUMBER	DOC TYPE	DOC PART	SHEET NUMBER
5601230500	PSD	005	1 OF 1

RELEASE STATUS	P1	RELEASE DATE	18.10.2016 00:45:07

FORMAT: master-tb-prod-A3
REVISION: G
DATE: 2015/12/14