THIS DRAWING IS UNPUBLISHED. RELEASED FOR PUBLICATION -,- .
© COPYRIGHT - By - ALL RIGHTS RESERVED.

LOC	DIST
G	14

REVISIONS

P	LTR	DESCRIPTION	DATE	DWN	APVD
	D2	REVISED PER ECO-11-013258	28JUN11	HMR	DR

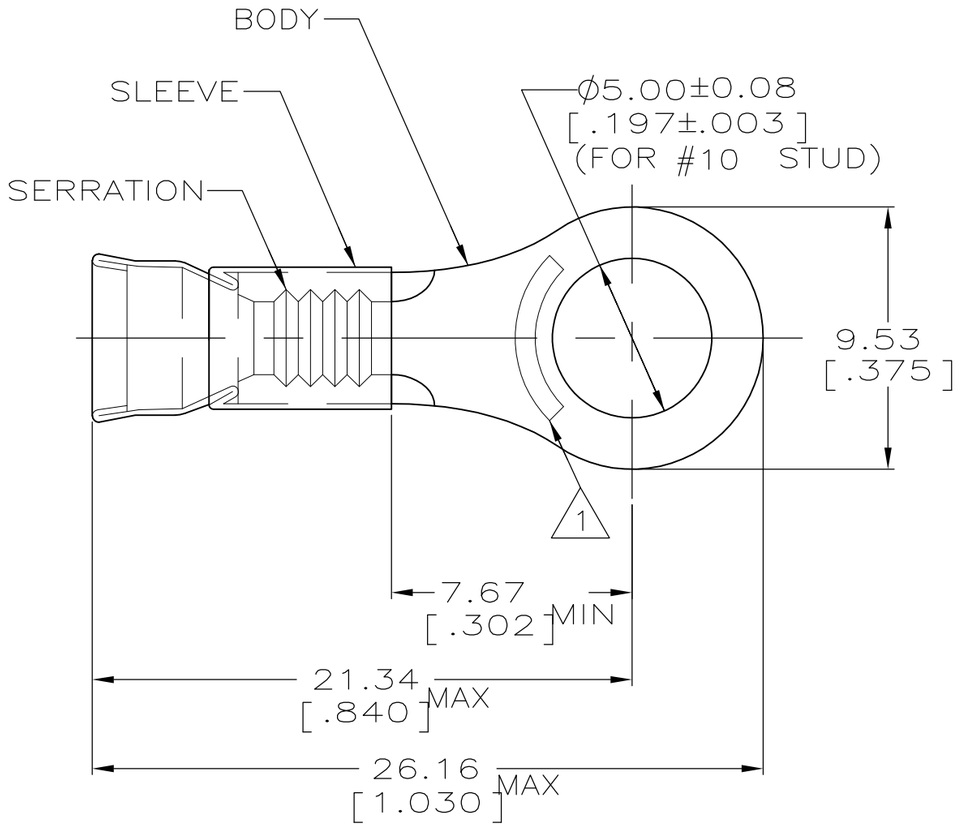

1. STAMP AMP 12-10* APPROX AS SHOWN
2. WIRE INSUL DIA, 3.81-6.35[.150-.250]
3. TONGUE MATL THK, 0.99±0.05[.039±.002]

QTY	PACKAGE TYPE	PART NO
500	LOOSE PIECE	325154

AMP INCORPORATED
CUSTOMER SERVICE SYSTEM

FOR ADDITIONAL PRODUCT INFORMATION OR COPIES OF DRAWINGS AND TECHNICAL DOCUMENTS	PRODUCT INFORMATION CENTER 1-800-522-6752
FOR APPLICATION TOOLING INFORMATION	TOOLING ASSISTANCE CENTER 1-800-722-1111
FOR ORDER ENTRY	1-800-526-5142

MAX RECOMMENDED OPERATING TEMPERATURE: 343° C [650° F]

VOLTAGE RATING: - -

CIRCULAR MIL AREA: 2.62mm² - 6.64mm² [5180-13100]

STRANDED WIRE

THIS DRAWING IS A CONTROLLED DOCUMENT.

DIMENSIONS: mm

TOLERANCES UNLESS OTHERWISE SPECIFIED:

0 PLC	± -
1 PLC	± -
2 PLC	± 0.20 [.008]
3 PLC	± -
4 PLC	± -
ANGLES	± -

MATERIAL: BODY: CU PER ASTM B152; SLEEVE: NI SIL PER ASTM B122

FINISH: BODY, NP, QQ-N-290

DWN	L OLMEDA	10OCT94
CHK	M ELLIS	10OCT94
APVD	S BORTNER	10OCT94
PRODUCT SPEC	—	
APPLICATION SPEC	—	
WEIGHT	—	

TE Connectivity

NAME: TERMINAL, RING TONGUE, STRATOTHERM™, DIAMOND GRIP™, WIRE SIZE, 12-10 AWG

SIZE	CAGE CODE	DRAWING NO	RESTRICTED TO
A3	00779	C-325154	—

CUSTOMER DRAWING | SCALE 4:1 | SHEET 1 OF 1 | REV D2