A3

IDEAS - PLAN REALISE A PARTIR D'UN MODELE 3D
NE PEUT ETRE MIS A JOUR QUE SUR CAO

N CLIENT

N OUTIL

N D'ETUDE

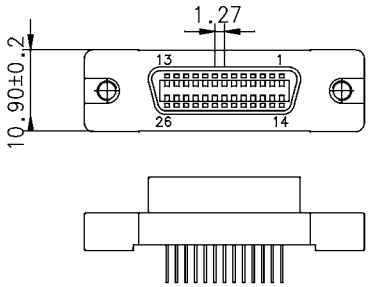

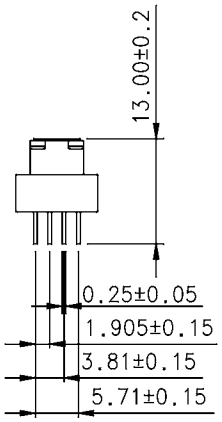

S Type

- (Without Latch Blocks)

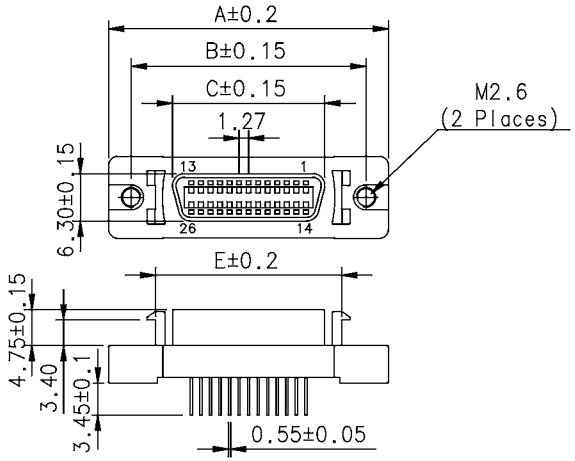

L Type

- (With Latch Blocks)

FEATURES:
Half pitch 1.27mm(.050") series
Ribbon type dip mount connector
Bracket with latch block and without latch block
Steel body provide EMI/RFI shielded

MATERIALS:
Housing and cover: Plastic thermoplastic P.B.T UL94V-0
Contact: Phosphor bronze gold selective plated over Tin
Shell: Steel, Nickel or tin plated over copper
Bracket: Steel, Nickel plated over copper
Boardlock: Brass Tin plated over copper

ELECTRICAL:
Current Rating: 1 Amp
Insulation Resistance: >500M Ω Min
Withstanding Voltage: AC 500V/r.m.s for 1 Minute
Contact Resistance: 35m Ω Max
Temperature Range: -55°C ~ +105°C

- Ordering Information

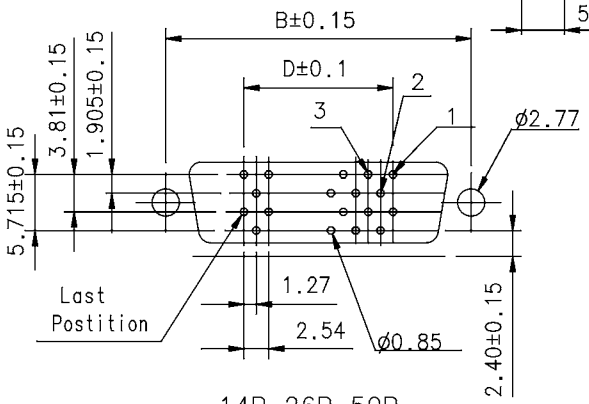

14P,26P,50P
PC Board Mounting Dimensions

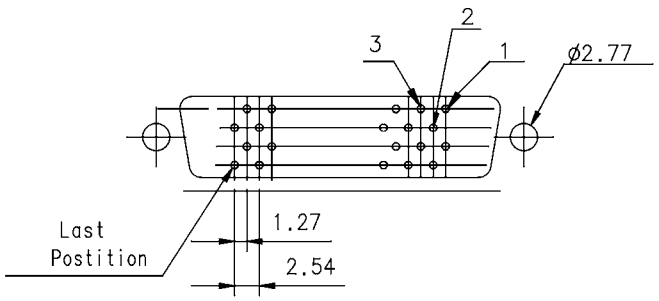

20P,36P,68P
PC Board Mounting Dimensions

MD5 SP 68 F 0 L 3

SERIES
Straight PCB termination
NUMBER OF CONTACT:
14,20,26,36,68
CONTACT TYPES:
F = female
CONTACT PLATING:
0 = selective flash gold
1 = selective 15u" gold
2 = selective 30u" gold
FIXING DEVICE :
L : Latching + Jackscrews
S : jackscrews only
THREADED HOLES:
1 : UNC # 2-56
2 : UNC #4-40
3 = M2.6

Dimensions

NO OF CONTACTS	A	B	C	D	E
14	29.57	23.64	12.63	7.62	17.02
20	33.38	27.44	16.44	11.43	20.60
26	37.20	31.20	20.25	15.24	24.64
36	43.50	37.60	26.60	21.59	30.99
50	52.60	46.80	35.50	30.48	39.88
68	64.00	57.90	46.90	41.91	51.30

Amphenol Socapex Usine de Dole	TOL. GEN.								
	VOLUME PIECE								
	SURFACE PIECE								
	PROTECTION								
ECH. 1.5 ENS.	TRAITEMENT								
N SERIE	MATIERE	A	CREATION PLAN	ATO	30/05 2005	ATO	A		
DOSSIER		CLIENT	MODIFICATIONS	EXEC.	DATE	Approb	IND.		
DATE DU TIRAGE / DESIGNATION	NINI D SERIES	N INTERNE	MD5 SP xxF						

COMMUNICATION ET UTILISATION INTERDITES SAUF AUTORISATION