FOR 2 & 3 CKTS.

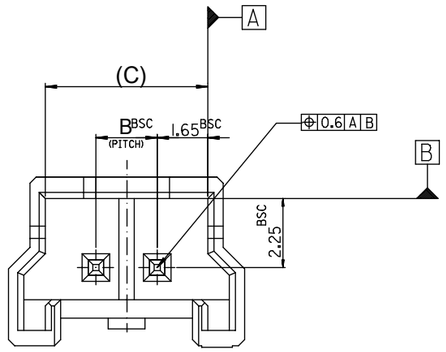


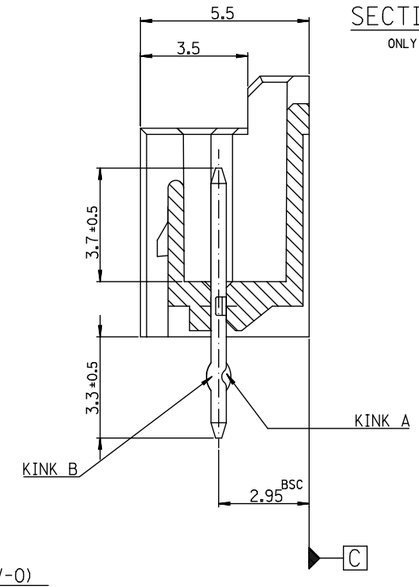


SECTION K-K'
ONLY 3 CKT

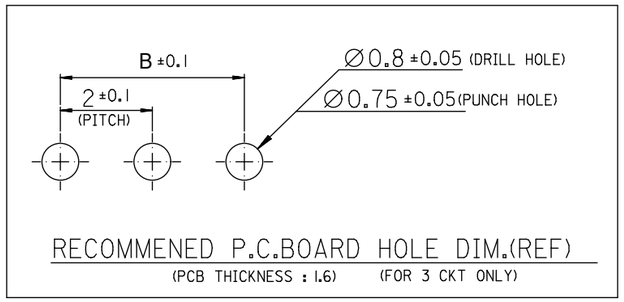


RECOMMENED P.C.BOARD HOLE DIM.(REF)
(PCB THICKNESS : 1.6) (FOR 3 CKT ONLY)

ISOMETRIC VIEW

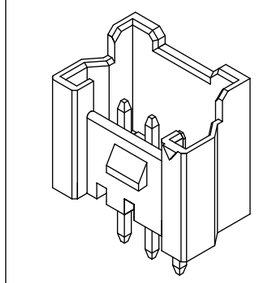

LEGEND

SD-35362-****

CKT NO.

COLOR
- 0 : NATURAL
- 1 : BLACK
- 2 : RED
- 3 : YELLOW
- 4 : BLUE
- 5 : GREEN
- 6 : TUBE PACKING (Natural Color)
- 7 : TUBE PACKING (Red Color)
- 8 : TUBE PACKING (Blue Color)

FINAL GOOD (BULK)
- 5 : SELECTIVE KINK (LEAD FREE)
- 6 : NONE KINK (LEAD FREE)

SUB ASSY (TUBE)
- 7 : SELECTIVE KINK (LEAD FREE)
- 8 : NONE KINK (LEAD FREE)

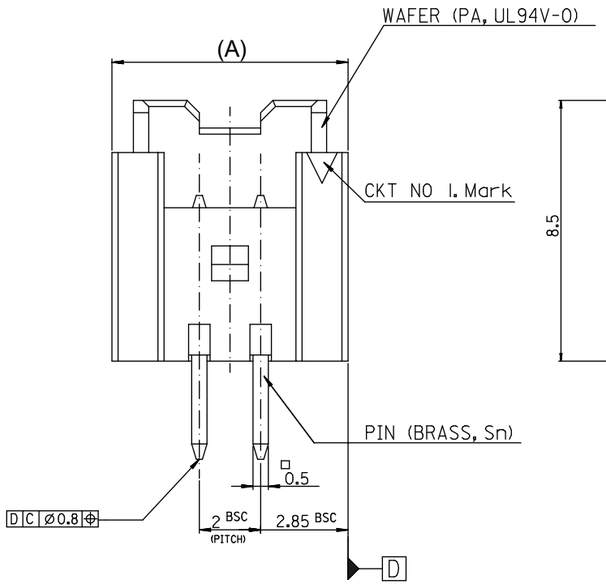


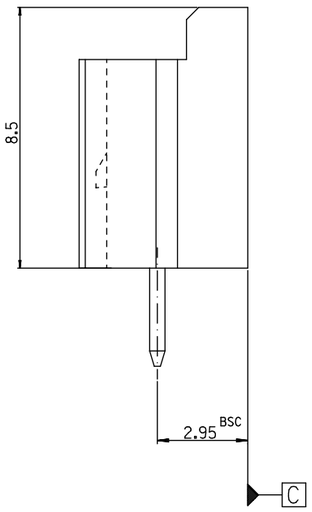


3 CKT

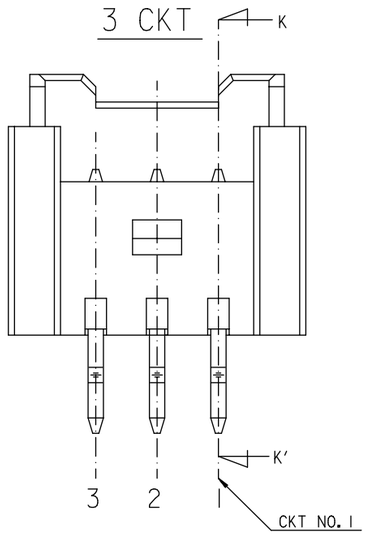


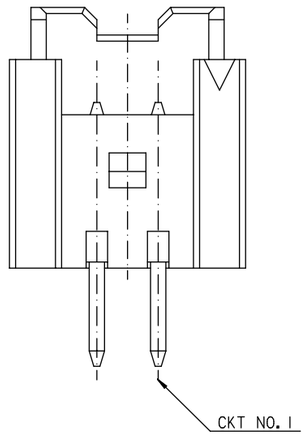


35362-0287

NOTES

1. MATERIAL : UNFILLED POLYAMIDE, UL94V-0
   PIN : BRASS
2. (F1) FINISHES : PIN - Tin(Sn) 1.0~3.0μm OVERALL
   Cu 1.5~3.75μm OVERAL
3. PRODUCT SPECIFICATION : PS-35507-003
4. MATING HOUSING : 35507-**0*
   MATING TERMINAL : 50212-8000
5. KINK

| CKT \ CKT NO | 1 | 2 | 3 |
|---|---|---|---|
| 2 CKT | —— | | |
| 3 CKT | A | B | A |

6. 35362-0287 IS ONLY KINKED 2P

| PRODUCT NO. \ CKT NO | 1 | 2 |
|---|---|---|
| 35362-0287 | A | B |

| | | | | | |
|---|---|---|---|---|---|
| 7.3 | 4 | 9.7 | 3536203** | 35362-03** | 3 |
| 5.3 | 2 | 7.7 | 3536202** | 35362-02** | 2 |
| (C) | B | (A) | MATERIAL NO. | ENG. NO. | CKT |

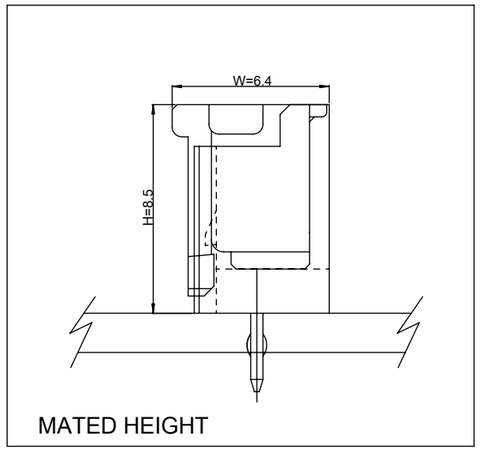


MATED HEIGHT

LEAD FREE

| | |
|---|---|
| 30 over | ±0.3 |
| 10 over 30 under | ±0.25 |
| 10 under | ±0.2 |
| ANGLE | ±3° |

GENERAL TOLERANCE

FUNCTIONAL SYMBOLS: F A = 0, F C = 0, F E = 0

DIVISIONAL SYMBOLS

THIS DRAWING CONTAINS INFORMATION THAT IS PROPRIETARY TO MOLEX ELECTRONIC TECHNOLOGIES, LLC AND SHOULD NOT BE USED WITHOUT WRITTEN PERMISSION

DIMENSION UNITS: mm — SCALE: 5:1

GENERAL TOLERANCES (UNLESS SPECIFIED)

| | |
|---|---|
| ANGULAR TOL | ± ° |
| 4 PLACES | ± |
| 3 PLACES | ± |
| 2 PLACES | ± |
| 1 PLACE | ± |
| 0 PLACES | ± |

DRAFT WHERE APPLICABLE MUST REMAIN WITHIN DIMENSIONS

CURRENT REV DESC:

EC NO: 636378
DRWN: SCHONG03 2020/04/21
CHK'D: JBJIN 2020/04/23
APPR: YSKIM02 2020/04/23

INITIAL REVISION:
DRWN: DYJANG 2004/09/01
APPR: CHANGWOOLEE 2004/09/02

THIRD ANGLE PROJECTION | DRAWING: A3-SIZE | SERIES: 35362

molex

2.0 W/B WAFER ASS'Y
-LEAD FREE-

PRODUCT CUSTOMER DRAWING

| DOCUMENT NUMBER | DOC TYPE | DOC PART | REVISION |
|---|---|---|---|
| SD-35362-002 | PSD | 002 | F3 |

| MATERIAL NUMBER | CUSTOMER | SHEET NUMBER |
|---|---|---|
| SEE TABLE | GENERAL MARKET | 1 OF 1 |

| DOCUMENT STATUS | P1 | RELEASE DATE | 2020/04/23 05:05:34 |
|---|---|---|---|

FORMAT: master-tb-prod-A3
REVISION: J
DATE: 2020/01/14