THIS DRAWING IS UNPUBLISHED. RELEASED FOR PUBLICATION -,- .
© COPYRIGHT - BY TYCO ELECTRONICS CORPORATION. ALL RIGHTS RESERVED.

LOC	DIST
G	14

REVISIONS

P	LTR	DESCRIPTION	DATE	DWN	APVD
	B1	REV PER ECR 07-012476	30MAY07	JR	TM

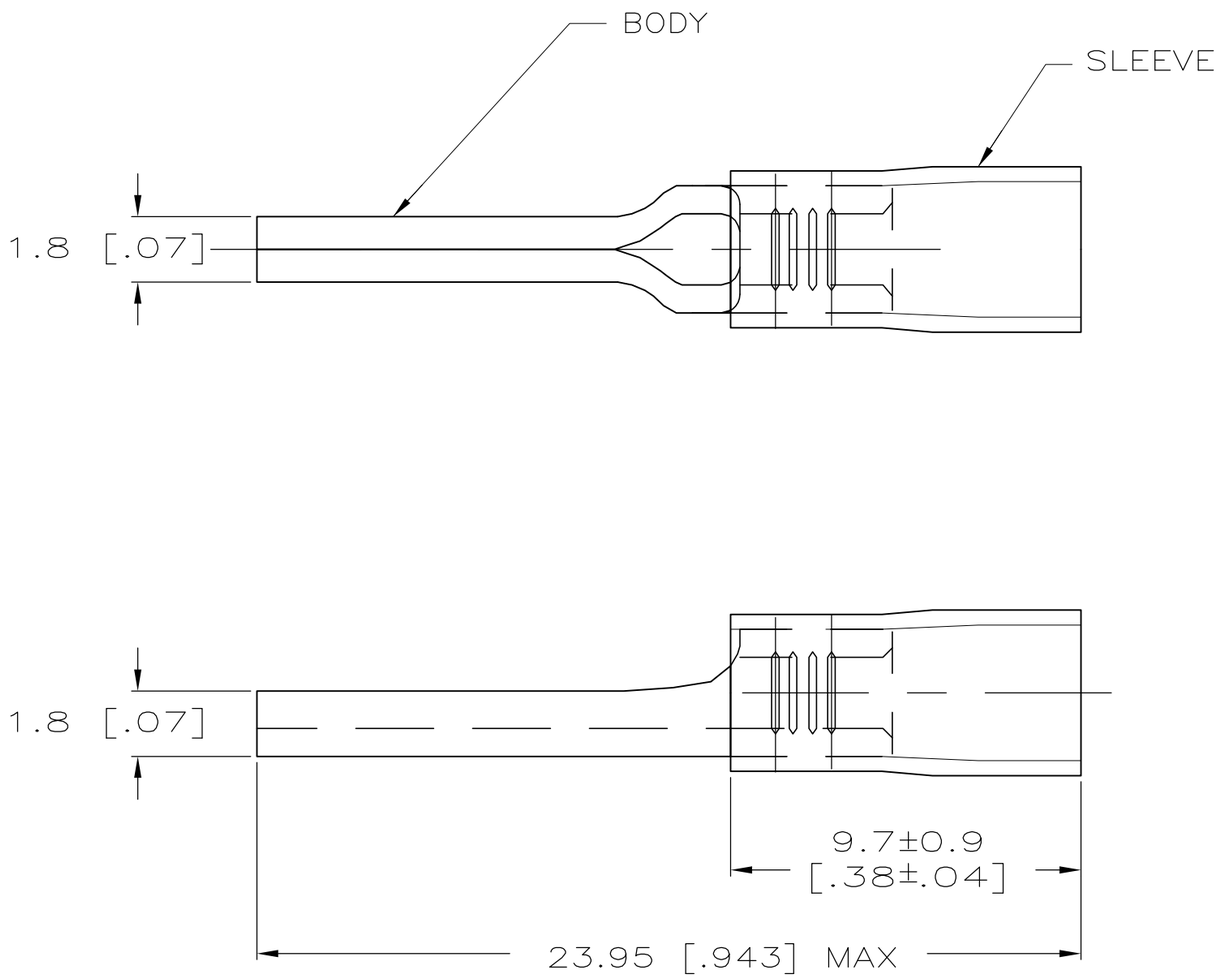

AMP WIRE RANGE	FILE E13288
22-18 AWG STRANDED	22-18 AWG STRANDED

1 WIRE INSULATION DIA.
2.67-3.56 [.105-.140] DIA.

2 MATERIAL: BODY - CU PER ASTM B152
SLEEVE - PVC

3 FINISH: BODY - TIN PL ASTM B545
SLEEVE - COLOR - RED

—	—	—
1000	ON TAPE	696116-1
QTY	PACKAGE TYPE	PART NO

AMP INCORPORATED
CUSTOMER SERVICE SYSTEMS

FOR ADDITIONAL PRODUCT INFORMATION OR COPIES OF DRAWINGS AND TECHNICAL DOCUMENTS	PRODUCT INFORMATION CENTER 1-800-522-6752
FOR APPLICATION TOOLING INFORMATION	TOOLING ASSISTANCE CENTER 1-800-722-1111
FOR ORDER ENTRY	1-800-526-5142

THIS DRAWING IS A CONTROLLED DOCUMENT FOR AMP INCORPORATED. IT IS SUBJECT TO CHANGE AND THE CONTROLLING ENGINEERING ORGANIZATION SHOULD BE CONTACTED FOR THE LATEST REVISION.

MAX RECOMMENDED OPERATING TEMPERATURE: 90°C [194°F]

VOLTAGE RATING: — —

CIRCULAR MIL AREA: 0.25-1.6mm ² [493-3158] STRANDED

THIS DRAWING IS A CONTROLLED DOCUMENT.

DIMENSIONS: mm [INCHES]

TOLERANCES UNLESS OTHERWISE SPECIFIED:

0 PLC	± -
1 PLC	± 0.38 [.015]
2 PLC	± 0.20 [.008]
3 PLC	± -
4 PLC	± -
ANGLES	± -

MATERIAL 2

FINISH 3

DWN	JR RUTH	04AUG99
CHK	T MICHIELUTTI	04AUG99
APVD	T MICHIELUTTI	04AUG99
PRODUCT SPEC	—	
APPLICATION SPEC	—	
WEIGHT	—	

Tyco Electronics
Tyco Electronics Corporation
Harrisburg, PA 17105-3608

NAME: TERMINAL, WIRE PIN, PLASTI-GRIP, 22-18

SIZE	CAGE CODE	DRAWING NO	RESTRICTED TO
A3	00779	C-696116	—

CUSTOMER DRAWING | SCALE 6:1 | SHEET 1 OF 1 | REV B1