MATERIAL NUMBER	OLD PART NUMBER	COUPLING NUT MATERIAL	COUPLING NUT FINISH
130017-0008	1A3002-34	BRASS	NICKEL PLATED
130017-0009	1A3002-348	STAINLESS STEEL	PASSIVATED

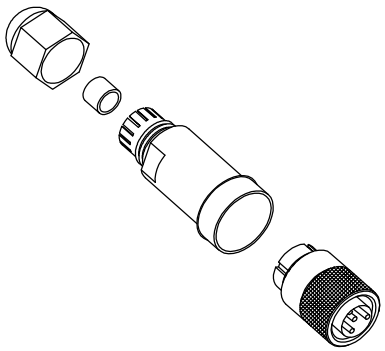

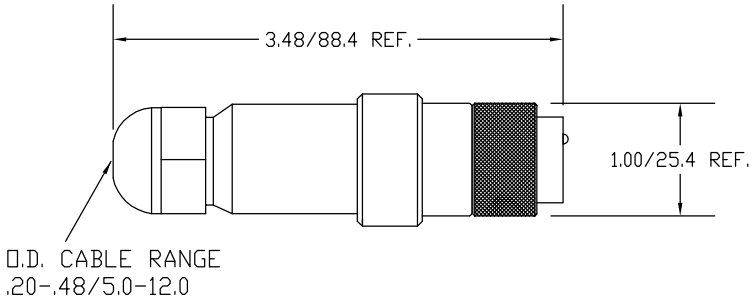

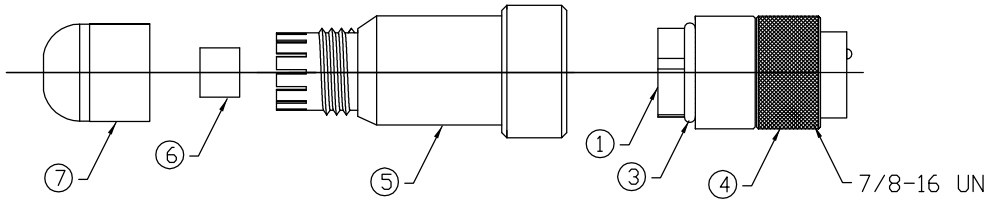

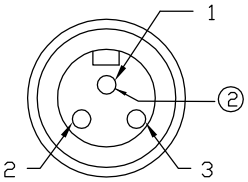

MALE FACE VIEW

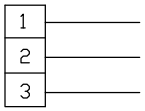

WIRING CHART

VOLTAGE RATING	600VAC/VDC
AMPERAGE RATING	13 AMPS
PROTECTION	IP67
OPERATING TEMPERATURE	-20°C TO 80°C
CSA CERTIFICATIONS	CSA CERTIFIED, FILE NO. LR6837

ITEM	COMPONENT	MATERIAL	FINISH
1	INSERT	NYLON	BLACK
2	PIN CONTACTS	COPPER ALLOY	GOLD PLATED
3	O-RING	NITRILE	BLACK
4	COUPLING NUT	SEE CHART	SEE CHART
5	MOLDED BODY	NYLON	BLACK
6	GROMMET	NITRILE	BLACK
7	CORD GRIP BODY	NYLON	BLACK

REV	DESCRIPTION
A	EC NO: WNA2010-0067 DRWN: BWOODMAN 7/29/09 CH'KD: JM — APPR: JFMURPHY 2009/08/10

QUALITY SYMBOLS
▼=0
(C)=0

GENERAL TOLERANCES (UNLESS SPECIFIED)

	mm	INCH
4 PLACES	±----	±----
3 PLACES	±----	±----
2 PLACES	±----	±.01
1 PLACE	±0.3	±----
ANGULAR ±----°		

DRAFT WHERE APPLICABLE MUST REMAIN WITHIN DIMENSIONS

DIMENSION STYLE: IN/MM
SCALE: ----
DESIGN UNITS: ----
THIRD ANGLE PROJECTION

DRAWN BY: BW DATE: 2009/07/28
CHECKED BY: TW DATE: 2009/07/29
APPROVED BY: ---- DATE: ----

TITLE: MINI 3P MALE ATTACH INT .20-.48 O.D. CABLE RANGE ----

molex MOLEX INCORPORATED

MATERIAL NO.: SEE CHART
DOCUMENT NO.: SD-130017-004
SHEET NO.: 1 OF 1
SIZE: A

THIS DRAWING CONTAINS INFORMATION THAT IS PROPRIETARY TO MOLEX INCORPORATED AND SHOULD NOT BE USED WITHOUT WRITTEN PERMISSION