MICRO SWITCH
A DIVISION OF HONEYWELL
FREEPORT, ILLINOIS

FED. MFR. CODE 91929

SWITCH-ENCLOSED

CATALOG LISTING
151ML1

THIS DRAWING COVERS A PROPRIETARY ITEM AND IS THE PROPERTY OF MICRO SWITCH A DIVISION OF HONEYWELL THIS DRAWING IS NOT TO BE COPIED OR USED WITHOUT THE APPROVAL OF MICRO SWITCH

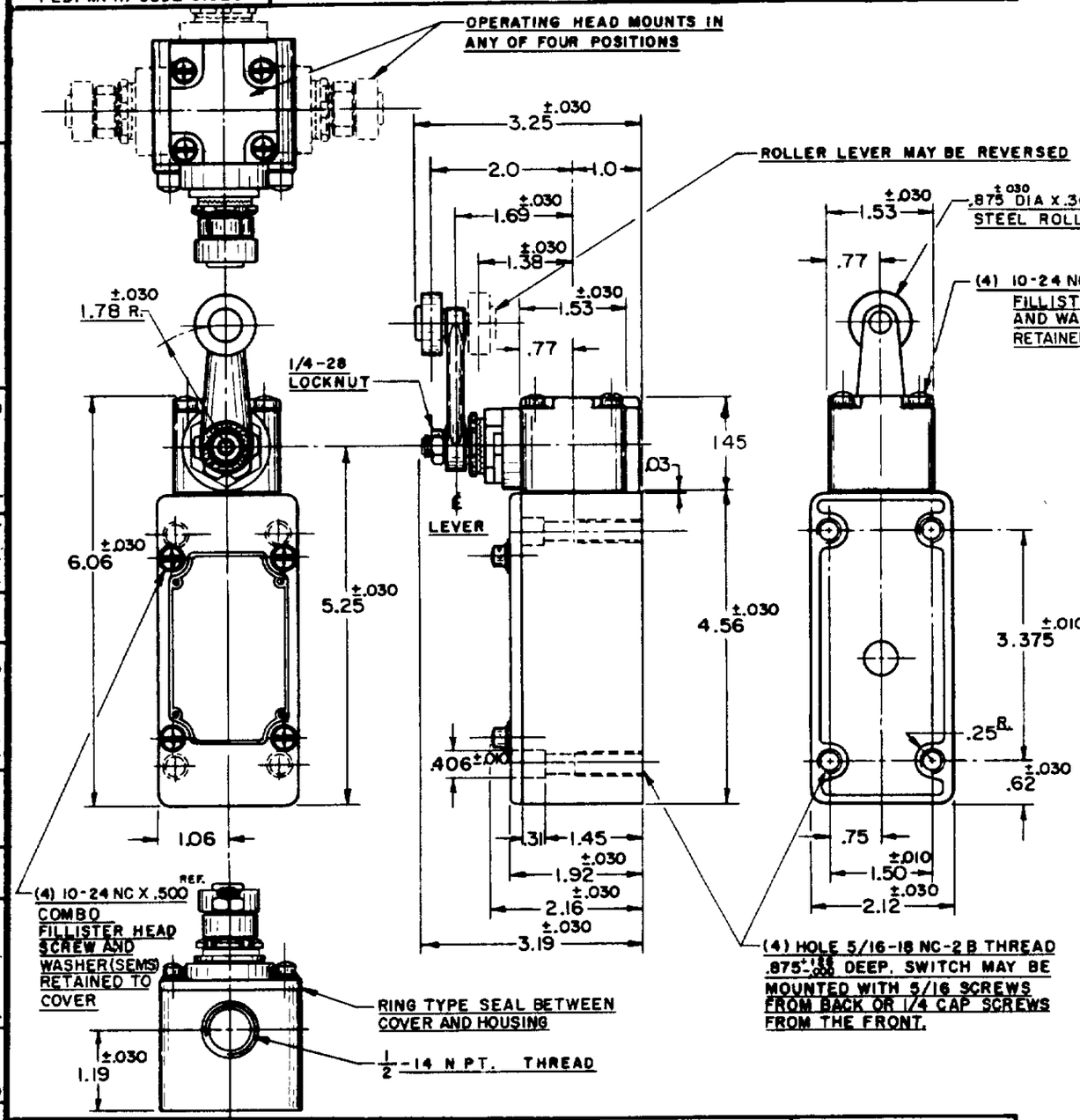

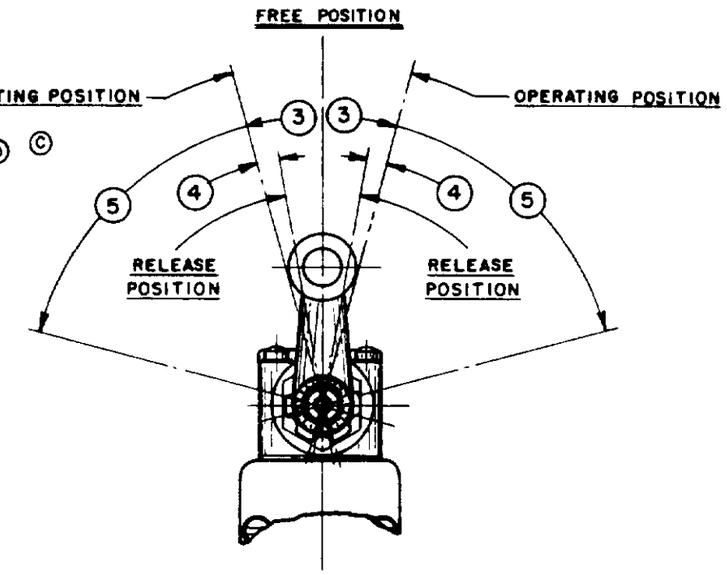

NOTES

1 - IT IS ESSENTIAL TO PREVENT ENTRANCE OF HARMFUL AGENTS THRU THE CONDUIT OPENING TO OBTAIN THE FULL BENEFIT OF THE SEALED CONSTRUCTION PROVIDED IN THIS UNIT

△2 SWITCH IS ASSEMBLED FOR ACTUATION IN EITHER DIRECTION

3 - LEVER MAY BE POSITIVELY LOCKED AT INTERVALS OF APPROX 0.4° (870 POSITIONS)

4 - LEVER MAY BE ADJUSTED TO ACTUATE THE SWITCH IN THE CLOCKWISE DIRECTION ONLY, THE COUNTER-CLOCKWISE DIRECTION ONLY, OR IN BOTH DIRECTIONS △2 △5

△5 TO CONVERT SWITCH FOR ACTUATION IN EITHER CLOCKWISE OR COUNTER-CLOCKWISE DIRECTION ONLY, REMOVE THE HEAD AND SLIDE THE CAM TOWARD THE REAR OF THE HEAD SUFFICIENTLY TO DISENGAGE FROM THE FLATS ON THE SHAFT. ROTATE THE CAM 90° IN THE OPPOSITE DIRECTION OF THE ACTUATION DESIRED AND RE-ENGAGE THE CAM WITH THE FLATS ON THE SHAFT

CHARACTERISTICS

OPERATING FORCE - - - - - - 3 LBS. MAX.
FULL OVERTRAVEL FORCE - - - - - 4 LBS. MAX.
RELEASE FORCE - - - - - - - 1/4 LB. MIN.
PRETRAVEL - - - - - - - - (3) - - 15° MAX.
DIFFERENTIAL TRAVEL - - - (4) - - - 7° MAX.
OVERTRAVEL - - - - - - (5) - - - 60° MIN.

SWITCH-BASIC REPLACEMENT - - - - - - - IMNI

ELECTRICAL DATA (IMNI)

CONTACT ARRANGEMENT
TWO CIRCUIT DOUBLE THROW
DOUBLE BREAK

(B) 10 A-120, 240, 480, OR 600 VAC
1/2 HP-120 VAC, 1 HP-240 VAC
0.8 A-115 VDC, 0.4 A-230 VDC
PILOT DUTY 600 VAC MAX

(UL) (CSA)

SCALE 1/2 TO 1

DO NOT SCALE PRINT

UNLESS OTHERWISE SPECIFIED
DIMENSIONS ARE IN INCHES

TOLERANCES ARE:

ONE PLACE	(.0)	±.030
TWO PLACE	(.00)	±.015
THREE PLACE	(.000)	±.005
ANGLES		±

WEIGHT

(M) 151ML1 ISSUE 4	REPLACES		
151ML1	RELEASE NO.		
M	DRAWING NUMBER		
B 12	4 APR 58		
B B X	K.F.M.	CHECK	
REVISIONS			
A C011247	O.M.W. 12 MAR 58	4 APR 58	
B C012789	M.B.F. 15 MAY 58	J.W.M.	
C C018841	H.B.W. 21 JAN 63	CHECK	
D C020678	M.B.F. DEC 63		
E C026064	M.B.F. 25 JUNE 69	4 APR 58	
F C052194-D	T.S.K. 23 SEPT 83		
G C055051-B	J.A.P. 17 DEC 84		
H C074287	G.J.W. 22 APR 93	G.C.H.	
		CHECK	
		58	
		12 MAR	
		DRAWN	
		O.M.W.	

FO-80378 003