THIS DRAWING IS THE EXCLUSIVE PROPERTY OF MARQUARDT. WITHOUT THEIR CONSENT IT MAY NOT BE REPRODUCED OR GIVEN TO THIRD PARTIES.
CONFIDENTIAL
VERTRAULICH

| 1 | 2 | 3 | 4 |
|---|---|---|---|
| recommended cut-out for snap-in fixing (edge opposite to snap-in direction) | wall thickness | length of cut-out | width of cut-out |
| | 0.75 to 1.25 | 19.2-0.1 | 12.9+0.1 |
| | 1.25 to 2 | 19.4-0.1 | 12.9+0.1 |
| | 2 to 3 | 19.8-0.1 | 12.9+0.1 |

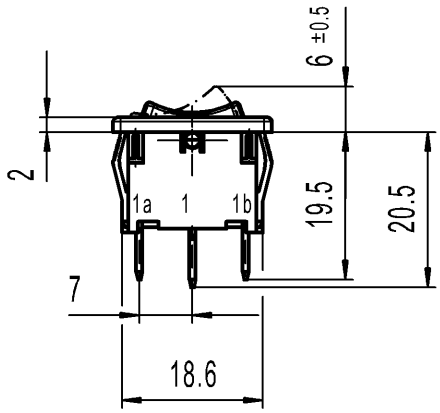


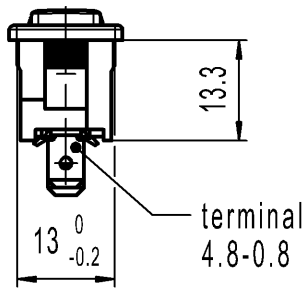


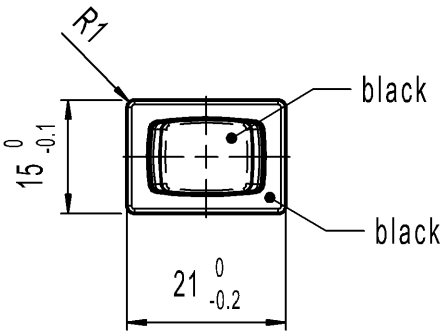


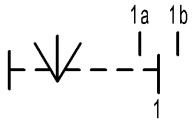


SPDT
With centre-off
Suitable for appliances of class II
Biased from both side

Marking
1808. µ
6(2)/250~T100/55

6A 125-250V AC
1/8HP
R58

Code of manufacture: place/year/week

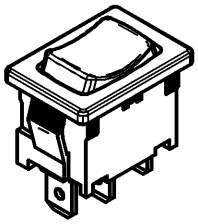

| Figure | Type | Customer Part No. | Art.No.-PI |
|---|---|---|---|
| - | - | - | 1808.1302-XX |

| Shape and location | Angle ± 2 ° | Length | | | Radii | |
|---|---|---|---|---|---|---|
| | Edge tolerance | 0-6 | ± 0.2 | ± | 0-6 | ± 0.2 |
| | | >6-15 | ± 0.4 | ± | | ± |
| | | >15-30 | ± 0.4 | ± | | ± |
| | | | ± | ± | | ± |
| | | | ± | ± | | ± |
| | | | ± | ± | | ± |
| | | | ± | ± | | ± |
| | | | ± | ± | | ± |

| Index | MEC-No. | Date (YYYY-MM-DD) | Edited by |
|---|---|---|---|
| h | 137894 | 2021-06-09 | JOSHIO |
| g | 64492 | 2009-10-20 | MUT |
| f | 29392 | 2000-05-04 | SIG |
| e | 16107 | 1984-08-30 | RIE |

Sheet 01
Format DIN A4
Projection
Scale 1:1
All dimensions are in millimetres
System NX V1872
Replacement of Zg.gl.Nr.v.04.05.2000

| Ident. | Document number | Index |
|---|---|---|
| K | 18081302 | h |

Appliance Switch

MARQUARDT

Alle Rechte bei Marquardt, auch fuer den Fall von Schutzrechtsanmeldungen. Jede Verfuegungsbefugnis, wie Kopier- und Weitergaberecht, bei uns.

# Mouser Electronics

Authorized Distributor

Click to View Pricing, Inventory, Delivery & Lifecycle Information:

Marquardt:

1808.1302 1801.1132 1829.1301 1807.1103 1806.1402 1801.6109 1804.2402 1800.1106 1804.6124 1803.2404
1801.1916 1804.1202 1801.2151 1801.1905 1801.2102 1806.1404 1804.1110 1808.1307 1801.1164 1808.6602
1802.6103 1801.6113 1804.2202 1809.1105 1807.1104 1801.5429 1801.1139 1806.1407 1801.5105 1806.1408
1806.1502 1822.1401 1801.6158 1821.1401 1804.1204 1808.6105 1802.1119 1805.7119 1806.1202 1803.2402
1801.192 1802.1425 1801.1252 1801.1193 1801.1903 1801.6157 1802.1120 1807.1115 1802.1126 1804.2903
1802.1105 1801.1173 1801.613 1801.1197 1802.1160 1801.6159 1801.1907 1806.1908 1802.3106 1801.6155
1801.1912 1805.7107 1801.6156 1801.6123 1807.1111 1801.5107 1806.1909 1801.6104 1800.1115 1801.1920