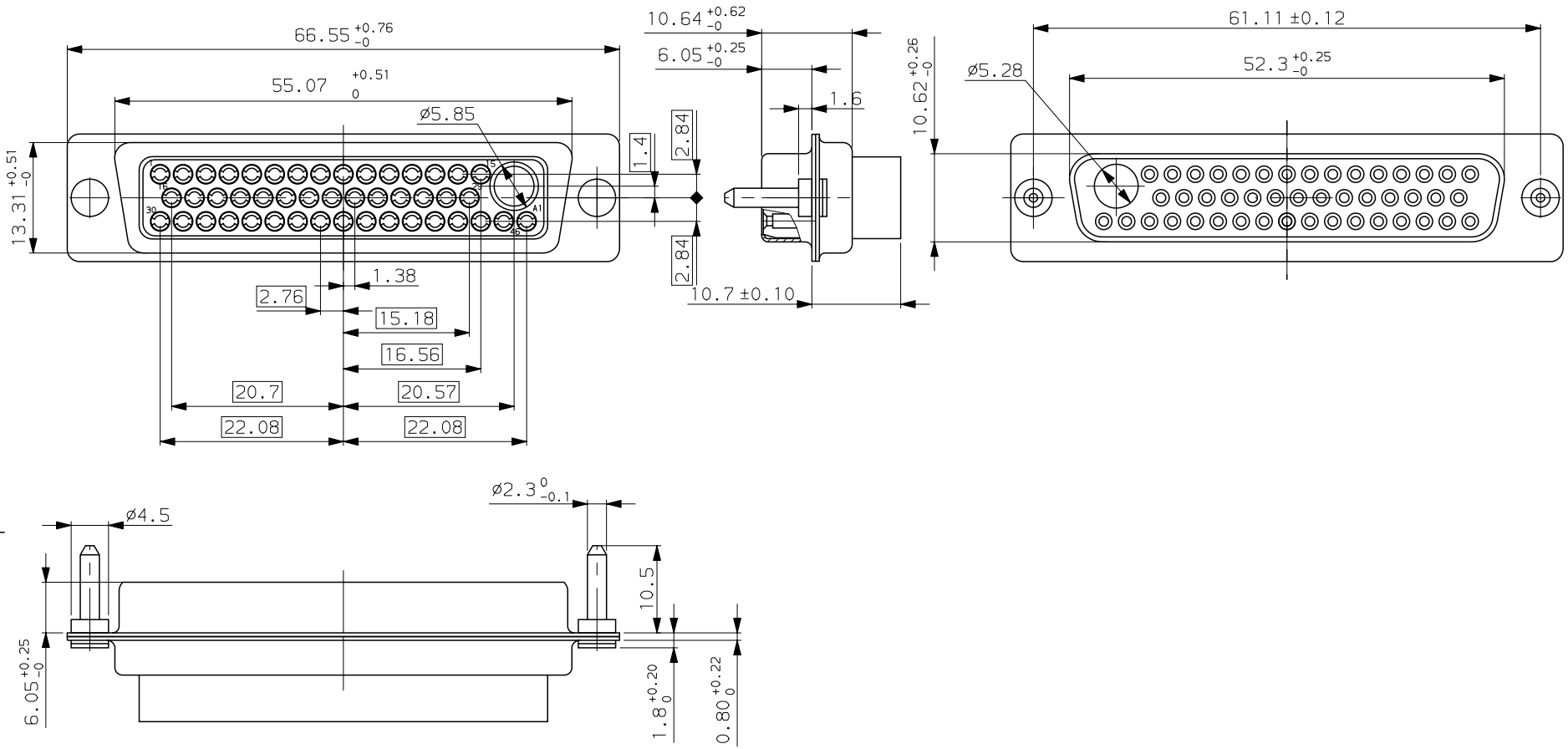

NOTES:

1- MATERIAL AND PLATING
SHELLS :steel ,bright tin over copper plating
HOUSING: glass filled thermoplastic ,UL 94 V0
color: BLACK
GUIDES :brass

0 10 20 30 MM

Part number	8656-47W1SLTSP264	
a	01/04/99	First issue --
ISS	DATE	Latest modification by : PESSON
--		MOD N°

Designed by: PESSON date 01/04/99 Type of drawing: CLIENT

TITLE : FEMALE CONNECTOR 47W1 with guides for CRIMPED CONTACTS

SHEET 1/1

SCALE: 2

FCI FRAMATOME GROUP

FRAMATOME CONNECTORS FRANCE
Rue Louis Breguet - BP 05
72024 LE MANS Cedex
Tel. (33)02.43.78.34.00

This document is the property of FRAMATOME CONNECTORS FRANCE
It must not be reproduced or communicated without permission in writing from the owners

FORMAT	DRG N°	PROJECT
A3	C01-8656-1514	M94D001