SERTECH LABS
A Microsemi Company
580 Pleasant St.
Watertown, MA 02472

Phone: 617-924-9280
Fax: 617-924-1235

1N5772
JANTX, JANTXV

DIODE ARRAY PRODUCT SPECIFICATION

MONOLITHIC AIR ISOLATED DIODE ARRAY

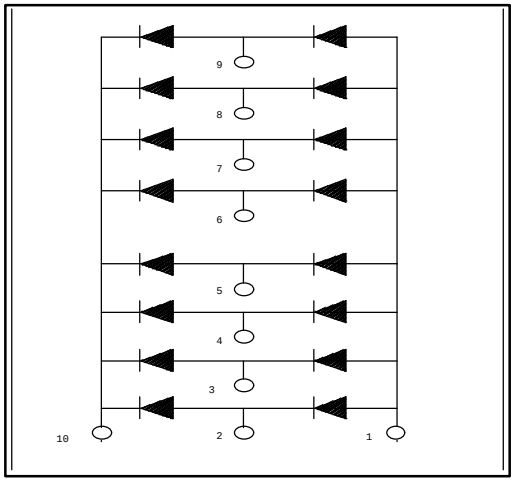

FEATURES:

- QUALIFIED PARTS LISTING: MIL-PRF-19500/474
- Bv > 60V at 10uA
- Ir < 100nA at 40V
- C < 8.0 pF

Absolute Maximum Ratings:

Symbol		Parameter	Limit	Unit
VBR(R)	*1 *2	Reverse Breakdown Voltage	60	Vdc
IO	*1 * 3	Continuous Forward Current	300	mAdc
IFSM	*1	Peak Surge Current (tp= 1/120 s)	500	mAdc
PT1	*4	Power Dissipation per Junction @ 25°C	400	mW
PT2	*4	Power Dissipation per Package @ 25°C	500	mW
Top		Operating Junction Temperature Range	-65 to +150	°C
Tstg		Storage Temperature Range	-65 to +200	°C

NOTE 1: Each Diode
NOTE 2: Pulsed: PW = 100ms max.; duty cycle ≤ 20%
NOTE 3: Derate at 2.4mA/°C above +25 °C
NOTE 4: Derate at 4.0mW/°C above +25 °C

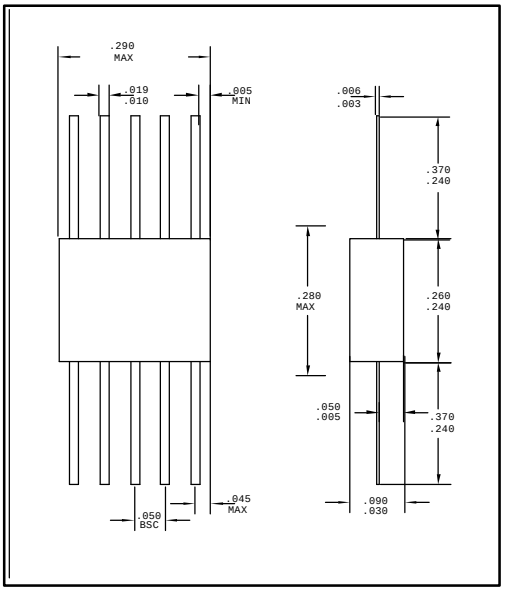

PACKAGE OUTLINE

Electrical Characteristics (Per Diode) @ 25°C unless otherwise specified

Symbol	Parameter	Conditions	Min	Max	Unit
Vf1	Forward Voltage	If = 100mAdc *1		1	Vdc
Vf2	Forward Voltage	If = 500mAdc *1		1.5	Vdc
IR1	Reverse Current	VR = 40 Vdc		0.1	uAdc
Ct	Capacitance (pin to pin)	VR = 0 Vdc ; f = 1 MHz		8.0	pF
tfr	Forward Recovery Time	If = 500mAdc		40	ns
trr	Reverse Recovery Time	If = IR = 200mAdc, irr = 20mAdc, RL = 100 ohms		20	ns

NOTE 1: Pulsed: PW = 300us +/- 50us, duty cycle ≤ 2%, 90us after leading edge

Sertech reserves the right to make changes to any product design, specification or other information at any time without prior notice.

MSC0288A Rev - 11/25/98