THIS DRAWING IS UNPUBLISHED. RELEASED FOR PUBLICATION - ,- .
© COPYRIGHT - By - ALL RIGHTS RESERVED.

| LOC | DIST |
|---|---|
| AD | 00 |

REVISIONS

| P | LTR | DESCRIPTION | DATE | DWN | APVD |
|---|---|---|---|---|---|
| | B3 | REVISED PER ECO-11-004587 | 11MAR11 | RK | HMR |

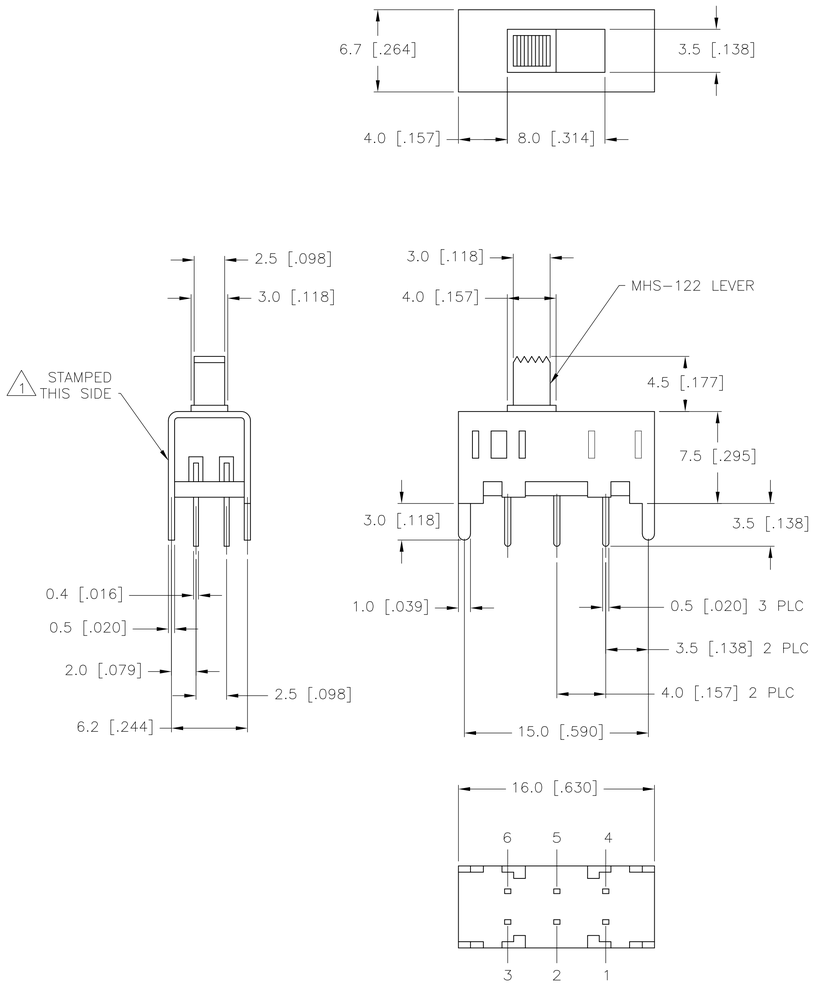


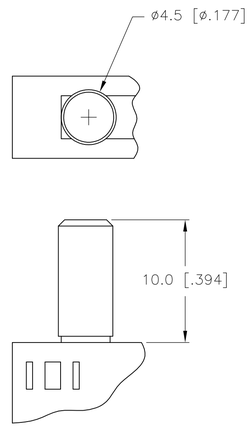


MHS222K & MHS223K
LEVER

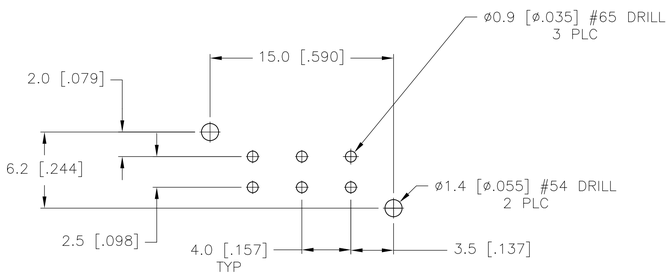


RECOMMENDED BOARD LAYOUT
PC LAYOUT TOLERANCE: ±.002

# MHS222 & MHS223 SERIES SWITCH

SPECIFICATIONS
MAKE-BEFORE-BREAK

MATERIALS:
ACTUATOR- THERMOPLASTIC, UL94HB
TERMINAL BOARD- PHENOLIC LAMINATED SHEET, UL94HB, NATURAL
FRAME- STEEL, NICKEL PLATE
TERMINAL/FIXED CONTACT- COPPER ALLOY, GOLD OR SILVER OVER NICKEL PLATE
MOVING CONTACT- COPPER ALLOY, GOLD OR SILVER OVER NICKLE PLATE
DETENT BALL- STEEL
COIL SPRING- GALVANIZED SPRING WIRE
LEVER,(K SERIES ONLY)- ALUMINUM
SEAL- EPOXY

ELECTRICAL:
CONTACT RATING- .4VA@20VDC OR PEAK AC (GOLD); 300mA@125V AC (SILVER)
INITIAL CONTACT RESISTANCE- 30 milliohm max.
FINAL CONTACT RESISTANCE- 100 milliohm max. (AFTER TEST)
INSULTAION RESISTANCE- 1,000 Megohms min.
DIELECTRIC STRENGTH- 500V RMS@SEA LEVEL
LIFE EXPECTANCY- 15,000 CYCLES MIN.

MECHANICAL:
ACTUATION FORCE- 600+/-300 GRAMS
TRAVEL- SEE P/N TABLE

ENVIRONMENTAL:
OPERATING TEMPERATURE- -20 TO +85 DEGREES C
STORAGE TEMPERATURE- -40 TO +100 DEGREES C
RESISTANCE TO SOLDER HEAT PER 109-202, CONDITION B
SOLDERABILITY PER EIA-364-52, CLASS 2, CATEGORY 1, 95% MIN COVERAGE

NOTES:

1. COUNTRY OF ORIGIN AND TE CONNECTIVITY LOGO LOCATED APPROXIMATELY AS SHOWN
2. ALL MATERIALS AND FINISHES SHALL COMPLY WITH EU DIRECTIVE 2002/95/EC OF 27JAN2003 (ROHS)
3. ANTI SOLDER WICK SEAL AT TERMINAL TO BOARD INTERFACE
4. ALL PERFORMANCE TESTING WAS DONE IN ACCORDANCE TO TE CONNECTIVITY SPECIFICATION 102-2469
5. OBSOLETE PARTS: OBSOLETE CIS STREAMLINING PER D.RENAUD/D.SINISI

| | PART NO. | T&B PART NO. | TYPE | TRAVEL | PLATING | 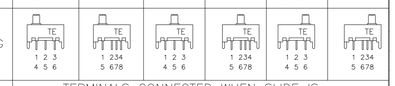 |
|---|---|---|---|---|---|---|
| OBSOLETE 5 | ~~1-1825289-1~~ | MHS233KG04 | DP3T | 2.00 | GOLD | - 6-5 2-1 - 7-6 3-2 - 8-6 4-2 |
| | 1-1825289-0 | MHS233K04 | DP3T | 2.00 | SILVER | - 6-5 2-1 - 7-6 3-2 - 8-6 4-2 |
| | 1825289-9 | MHS233G04 | DP3T | 2.00 | GOLD | - 6-5 2-1 - 7-6 3-2 - 8-6 4-2 |
| | 1825289-8 | MHS23304 | DP3T | 2.00 | SILVER | - 6-5 2-1 - 7-6 3-2 - 8-6 4-2 |
| | - | MHS223KG04 | DPDT | 2.00 | GOLD | 5-4 2-1 - OFF - 6-5 3-2 - |
| | 1825289-7 | MHS223K04 | DPDT | 2.00 | SILVER | 5-4 2-1 - OFF - 6-5 3-2 - |
| | 1825289-6 | MHS223G04 | DPDT | 2.00 | GOLD | 5-4 2-1 - OFF - 6-5 3-2 - |
| | 1825289-5 | MHS22304 | DPDT | 2.00 | SILVER | 5-4 2-1 - OFF - 6-5 3-2 - |
| OBSOLETE 5 | ~~1825289-4~~ | MHS222KG04 | DPDT | 4.00 | GOLD | 5-4 2-1 - NONE - 6-5 3-2 - |
| | ~~1825289-3~~ | MHS222K04 | DPDT | 4.00 | SILVER | 5-4 2-1 - NONE - 6-5 3-2 - |
| | 1825289-2 | MHS222G04 | DPDT | 4.00 | GOLD | 5-4 2-1 - NONE - 6-5 3-2 - |
| | 1825289-1 | MHS22204 | DPDT | 4.00 | SILVER | 5-4 2-1 - NONE - 6-5 3-2 - |

TERMINALS CONNECTED WHEN SLIDE IS IN POSITION SHOWN.

THIS DRAWING IS A CONTROLLED DOCUMENT.

DIMENSIONS: mm

TOLERANCES UNLESS OTHERWISE SPECIFIED:
0 PLC ± -
1 PLC ± 0.3 [.012]
2 PLC ± -
3 PLC ± -
4 PLC ± -
ANGLES ± 1°

MATERIAL -
FINISH -

DWN R BROWN 21DEC05
CHK M SARVER 21DEC05
APVD M SARVER 21DEC05
PRODUCT SPEC —
APPLICATION SPEC —
WEIGHT —
CUSTOMER DRAWING

TE Connectivity

NAME
SLIDE SWITCH, MHS SERIES, DOUBLE POLE, VERTICAL

| SIZE | CAGE CODE | DRAWING NO | RESTRICTED TO |
|---|---|---|---|
| A1 | 00779 | C-1825289 | — |

SCALE 4:1 SHEET 1 OF 2 REV B3

THIS DRAWING IS UNPUBLISHED. RELEASED FOR PUBLICATION - ,- .
© COPYRIGHT - By - ALL RIGHTS RESERVED.

| LOC | DIST |
|---|---|
| AD | 00 |

REVISIONS

| P | LTR | DESCRIPTION | DATE | DWN | APVD |
|---|---|---|---|---|---|
| | - | SEE SHEET 1 | - | - | - |

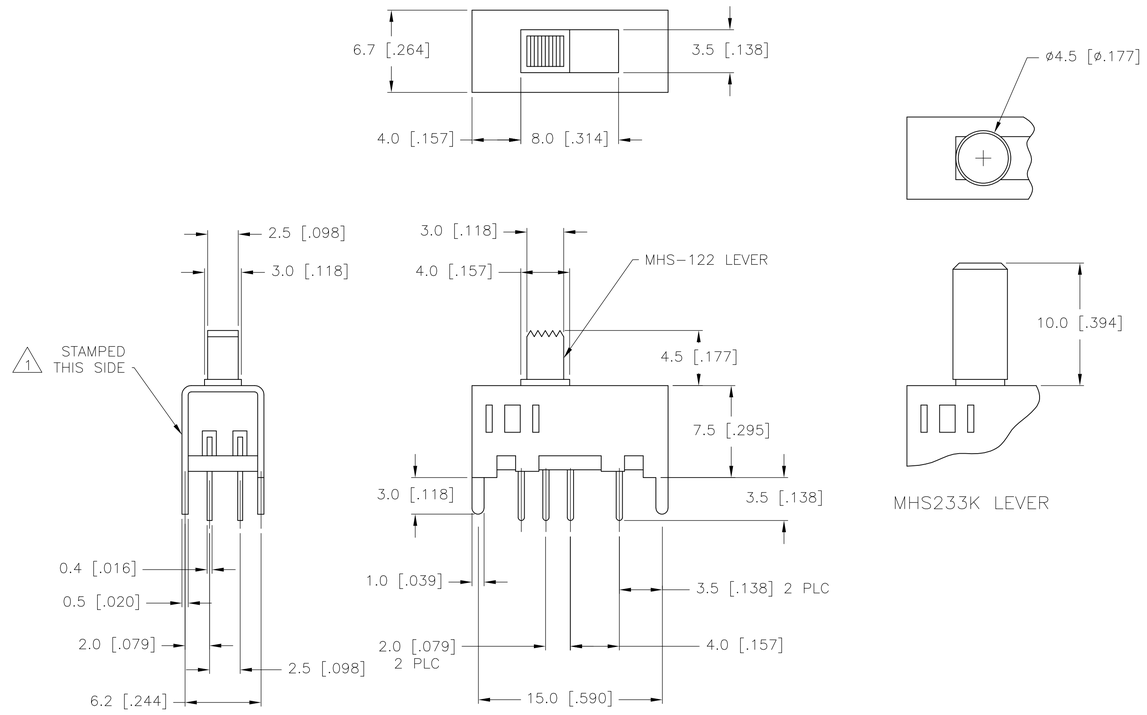


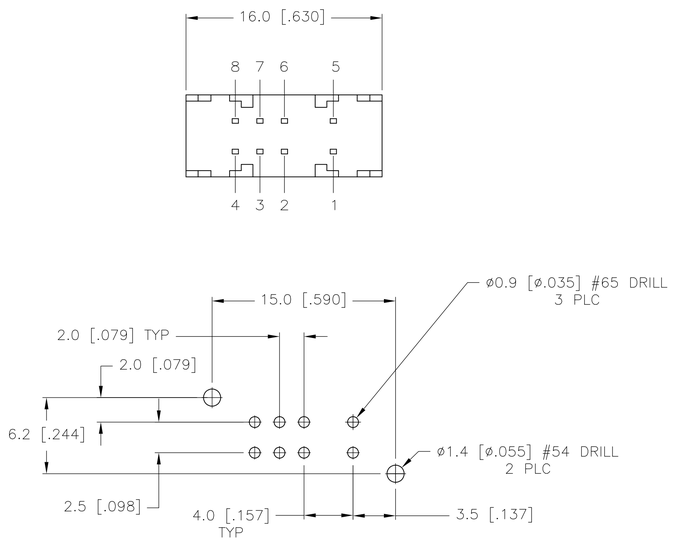


RECOMMENDED BOARD LAYOUT
PC LAYOUT TOLERANCE: ±.002

# MHS233 SERIES SWITCH

SPECIFICATIONS
MAKE-BEFORE-BREAK

MATERIALS:
ACTUATOR- THERMOPLASTIC, UL94HB
TERMINAL BOARD- PHENOLIC LAMINATED SHEET, UL94HB, NATURAL
FRAME- STEEL, NICKEL PLATE
TERMINAL/FIXED CONTACT- COPPER ALLOY, GOLD OR SILVER OVER NICKEL PLATE
MOVING CONTACT- COPPER ALLOY, GOLD OR SILVER OVER NICKLE PLATE
DETENT BALL- STEEL
COIL SPRING- GALVANIZED SPRING WIRE
LEVER,(K SERIES ONLY)- ALUMINUM
SEAL- EPOXY

ELECTRICAL:
CONTACT RATING- .4VA@20VDC OR PEAK AC (GOLD); 300mA@125V AC (SILVER)
INITIAL CONTACT RESISTANCE- 30 milliohm max.
FINAL CONTACT RESISTANCE- 100 milliohm max. (AFTER TEST)
INSULTAION RESISTANCE- 1,000 Megohms min.
DIELECTRIC STRENGTH- 500V RMS@SEA LEVEL
LIFE EXPECTANCY- 15,000 CYCLES MIN.

MECHANICAL:
ACTUATION FORCE- 600+/-300 GRAMS
TRAVEL- SEE P/N TABLE

ENVIRONMENTAL:
OPERATING TEMPERATURE- -20 TO +85 DEGREES C
STORAGE TEMPERATURE- -40 TO +100 DEGREES C
RESISTANCE TO SOLDER HEAT PER 109-202, CONDITION B
SOLDERABILITY PER EIA-364-52, CLASS 2, CATEGORY 1, 95% MIN COVERAGE

NOTES:

1. COUNTRY OF ORIGIN AND TE CONNECTIVITY LOGO PER TEC-202-36 LOCATED APPROXIMATELY AS SHOWN
2. ALL MATERIALS AND FINISHES SHALL COMPLY WITH EU DIRECTIVE 2002/95/EC OF 27JAN2003 (ROHS)
3. ANTI SOLDER WICK SEAL AT TERMINAL TO BOARD INTERFACE
4. ALL PERFORMANCE TESTING WAS DONE IN ACCORDANCE TO TE CONNECTIVITY SPECIFICATION 102-2469

THIS DRAWING IS A CONTROLLED DOCUMENT.

DIMENSIONS: mm

TOLERANCES UNLESS OTHERWISE SPECIFIED:
0 PLC ± -
1 PLC ± 0.3 [.012]
2 PLC ± -
3 PLC ± -
4 PLC ± -
ANGLES ± 1°

MATERIAL -
FINISH -

DWN R BROWN 21DEC05
CHK M SARVER 21DEC05
APVD M SARVER 21DEC05
PRODUCT SPEC —
APPLICATION SPEC —
WEIGHT —
CUSTOMER DRAWING

TE Connectivity

NAME SLIDE SWITCH, MHS SERIES, DOUBLE POLE, VERTICAL

| SIZE | CAGE CODE | DRAWING NO | RESTRICTED TO |
|---|---|---|---|
| A1 | 00779 | C-1825289 | — |

SCALE 4:1 SHEET 2 OF 2 REV B3

4805 (3/11)