THIS DRAWING IS UNPUBLISHED. RELEASED FOR PUBLICATION 20
© COPYRIGHT 20 BY TYCO ELECTRONICS CORPORATION. ALL RIGHTS RESERVED.

SET UP GAGE 458637-3

LOC	DIST
A	66

REVISIONS

P	LTR	DESCRIPTION	DATE	DWN	APVD
	A	SEE ECO-06-009795	26APR2006	DP	MC
	A1	ECR-08-017422	10JUL2008	MY	TE

PART NUMBER	REV	TERMINATOR	FEED TYPE	DESCRIPTION
1528639-1	A	LEADMAKER	MECH POST FEED	CUTS CARRIER
1528639-2	A	BENCH	MECH PRE FEED	CUTS CARRIER
1528639-6	A	LEADMAKER	MECH POST FEED	CONTINUOUS CARRIER
7-1528639-1	A	LEADMAKER	MECH POST FEED	-1 AND SPARE PARTS
7-1528639-2	A	BENCH	MECH PRE FEED	-2 AND SPARE PARTS
7-1528639-6	A	LEADMAKER	MECH POST FEED	-6 AND SPARE PARTS
7-1528639-7	A	-	-	SPARE PARTS KIT

CRIMP DATA MOLEX TERMINAL TE CRIMP SPEC

TERMINAL NAME: CRIMP TERMINAL .062" DIAMETER

CRIMP	SIZE	TYPE	RANGE
WIRE	1.40 [.055 IN]	F	24-18 AWG △6
INSUL	2.54 [.100 IN]	F	1.52-2.30 [.060-.090 IN]

WIRE STRIP LENGTH 3.17-3.96 [.125-.156 IN]

APPL INSTRUCTIONS 408-8322 & 408-8490

TERMINAL - -
APPL SPEC - -

FEED 9.55 [.376 IN]

TERMINALS APPLIED

TYCO PN (PIN)	MFR PN (PIN)	TYCO PN (SKT)	MFR PN (SKT)
1572015-1	02-06-2101	1572015-7	02-06-1101
1572015-2	02-06-6101	1572015-8	02-06-5101
1572015-3	02-06-6118	1572015-9	02-06-5108
1572015-4	02-06-6116	1-1572015-0	02-06-5100
1572015-5	02-06-6100	1-1572015-1	02-06-5105
1572015-6	02-06-6105	1-1572015-2	02-06-1118

WIRE SIZE	CRIMP HEIGHT * △5	REF SETTING *
0.75 mm^2	01.02 ±0.05 [.040 ±.002 IN]	A2
0.50 mm^2	0.86 ±0.05 [.034 ±.002 IN]	B0
0.25 mm^2	0.74 ±0.05 [.029 ±.002 IN]	B9
-	-	-
-	-	-
-	-	-
-	-	-
-	-	-

△1 RECOMMENDED SPARE PARTS.
2. GREASE RAM, CAM, CAM FOLLOWER AND FEED ROD LIGHTLY.

△3 CERTAIN TERMINALS REQUIRE LUBRICATION. REFER TO THE APPLICATOR INSTRUCTION SHEET FOR MORE INFORMATION.
4. LUBRICATE DAILY PER THE APPLICATOR INSTRUCTION SHEET SUPPLIED WITH THE APPLICATOR.

△5 CRIMP DATA CALCULATED BY TYCO ELECTRONICS UK LTD. TENSILE VALUES (BASED UPON MOLEX AWG TENSILE VALUES);
0.75mm^2 = 85N
0.50mm^2 = 64N
0.25mm^2 = 43N

△6 WIRE RANGE QUOTED IS THAT OF THE TERMINAL AND NOT THAT OF THE APPLICATOR.

△7 CUT TO LENGTH AT ASSEMBLY.

△8 [ITEM 18] TERMINAL HOLD DOWN, WILL REQUIRE ADJUSTMENT WHEN CHANGING BETWEEN PIN & SOCKET TYPE TERMINALS.

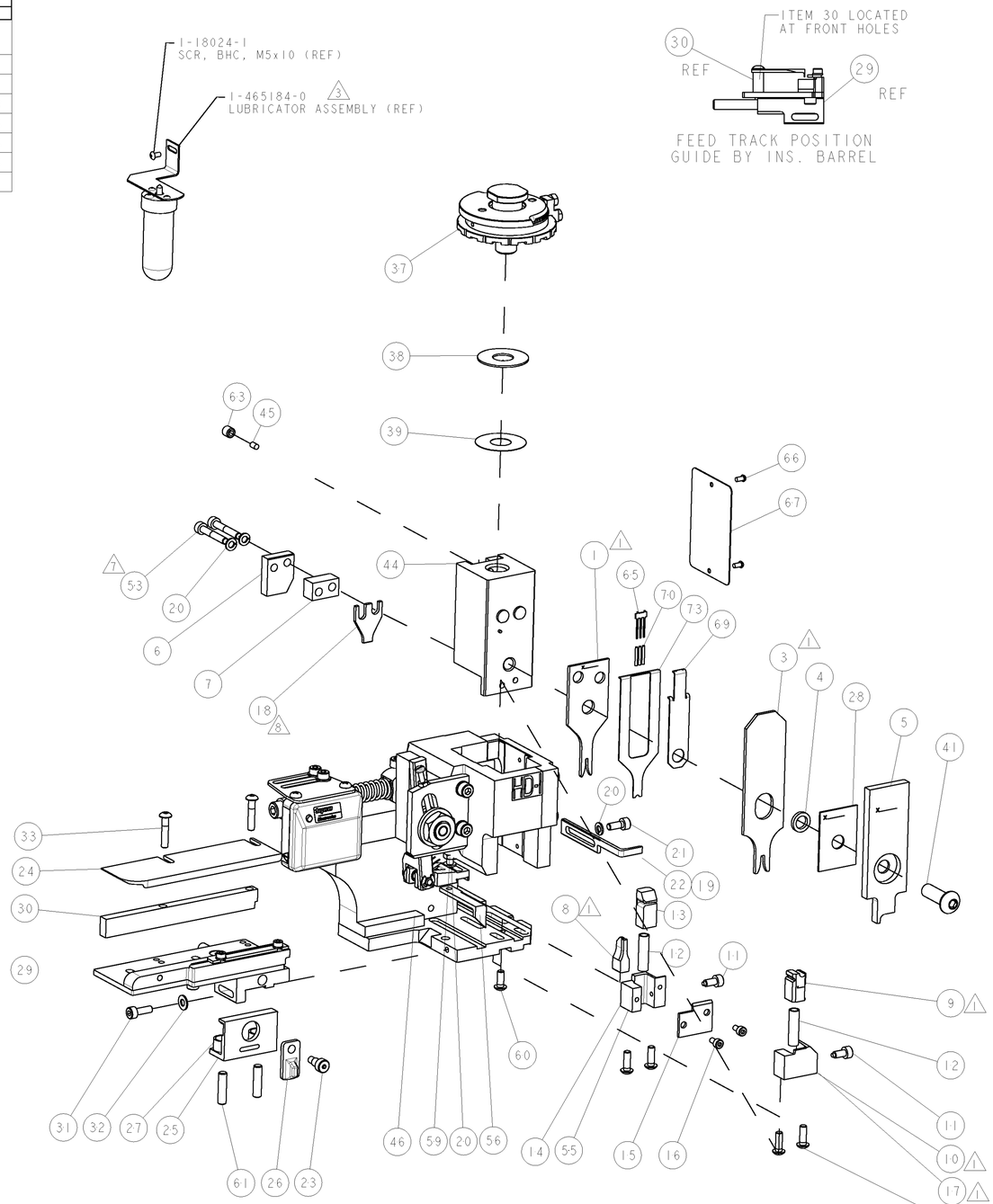

* WARNING
ON INSTALLATION, SET WIRE DISC TO LARGEST WIRE SIZE SETTING. USE OF SETTINGS BELOW MIN. REQUIRED CRIMP HEIGHT SETTING WILL CAUSE DAMAGE TO CRIMP TOOLING.

VIEW B ROTATED 180°

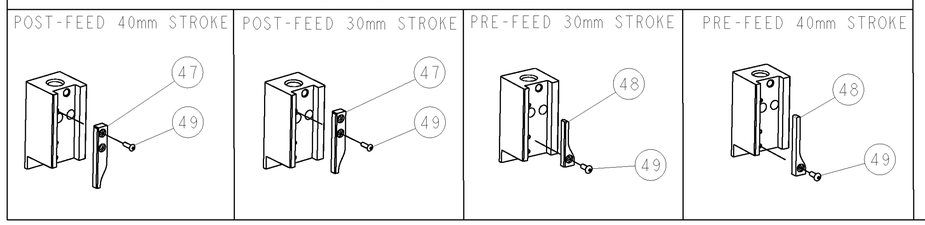

-77	-76	-72	-71	-6	-2	-1	PART NO	DESCRIPTION	ITEM NO
-	-	-	-	-	-	-	-	-	83
-	-	-	-	-	-	-	-	-	82
-	-	-	-	-	-	-	-	-	81
-	-	-	-	-	-	-	-	-	80
-	-	-	-	-	-	-	-	-	79
-	-	-	-	-	-	-	-	-	78
-	-	-	-	-	-	-	-	-	77
-	-	-	-	-	-	-	-	-	76
-	-	-	-	-	-	-	-	-	75
-	-	-	-	-	-	-	-	-	74
-77	-76	-72	-71	-6	-2	-1	PART NO	DESCRIPTION	ITEM NO
-	1	1	1	1	1	1	1490525-3	DEPRESSOR, WIRE	73
-	-	-	-	-	-	-	-	-	72
-	1	1	1	1	1	1	1338705-3	DOCUMENTATION PACKAGE	71
-	3	3	3	3	3	3	2-23147-2	SPRING, COMPRESSION	70
-	1	1	1	1	1	1	1490524-1	DEPRESSOR, SPACER	69
-	-	-	-	-	-	-	-	-	68
-	1	1	1	1	1	1	461264-5	PLATE, IDENTIFICATION	67
-	2	2	2	2	2	2	21017-2	SCREW, DRIVE	66
-	1	1	1	1	1	1	1424350-1	HOLDER, PIN, WIRED	65
-	-	-	-	-	-	-	-	-	64
-	1	1	1	1	1	1	3-18031-0	SCR, SET, CUP POINT M6 X 6.0	63
-	-	-	-	-	-	-	-	-	62
-	2	2	2	2	2	2	2-18032-5	SCR, SET, FLT POINT M5 X 20.0	61
-	1	1	1	1	1	1	18024-7	SCR, BTN SKT HD CAP (M4 X 10.0)	60
-	1	1	1	1	1	1	5-18022-2	SCR, HEX HD CAP M4 X 8.0	59
-	-	-	-	-	-	-	-	-	58
-	-	-	-	-	-	-	-	-	57
-	1	1	1	1	1	1	1338685-1	PAWL, FEED	56
△1 -	1	-	-	1	-	-	1338723-1	HOLDER, SHEAR, REAR [NO CUT]	55
-	4	4	4	4	4	4	18024-8	SCR, BTN SKT HD CAP (M4 X 12.0)	54
△7 -	2	2	2	2	2	2	1-18023-5	SCR, SKT HD CAP M4 X 25.0	53
-	-	-	-	-	-	-	-	-	52
-	-	-	-	-	-	-	-	-	51
-	-	-	-	-	-	-	-	-	50
-	1	1	1	1	1	1	18024-3	SCR, BTN SKT HD CAP (M3 X 10.0)	49
-	-	1	-	-	1	-	1338675-1	CAM, UNIVERSAL PRE FEED	48
-	1	-	1	1	-	1	1338676-1	CAM, UNIVERSAL POST-FEED	47
-	1	1	1	1	1	1	1320999-3	APPLICATOR SUBASSEMBLY, HDI	46
-	1	1	1	1	1	1	690191-1	PLUG,NYLON	45
-	1	1	1	1	1	1	1338660-3	RAM	44
-	-	-	-	-	-	-	-	-	43
-	-	-	-	-	-	-	-	-	42
-	1	1	1	1	1	1	2-18024-6	SCR, BTN SKT HD CAP (M8 X 25.0)	41
-	-	-	-	-	-	-	-	-	40
-	1	1	1	1	1	1	690125-1	SHIM SUB-ASSY	39
-	1	1	1	1	1	1	469367-7	SHIM	38
-	1	1	1	1	1	1	879103-3	FINE ADJUST HEAD SUBASSY	37
-	-	-	-	-	-	-	-	-	36
-	-	-	-	-	-	-	-	-	35
-	-	-	-	-	-	-	-	-	34
-	2	2	2	2	2	2	1-18024-0	SCR, BTN SKT HD CAP (M4 X 20.0)	33
-	1	1	1	1	1	1	18027-2	WASHER, FLAT, REG M4	32
-	1	1	1	1	1	1	1-18023-2	SCR, SKT HD CAP M4 X 12.0	31
-	1	1	1	1	1	1	1320908-4	SPACER, STRIP GUIDE	30
-	1	1	1	1	1	1	1633073-1	STRIP GUIDE ASSEMBLY	29
-	1	1	1	1	1	1	455888-8	SPACER, CRIMPER	28
-	2	2	2	2	2	2	1-22284-0	SPRING, COMPRESSION	27
-	1	1	1	1	1	1	356835-1	LEVER, DRAG RELEASE	26
-	1	1	1	1	1	1	240792-1	DRAG, TERMINAL	25
-	1	1	1	1	1	1	1320928-1	PLATE, STRIP GUIDE	24
-	1	1	1	1	1	1	980371-4	SCR, SKT HD SHLDR 5.0 DIA X 6.0	23
-	1	-	1	1	-	1	690472-2	STRIPPER	22
-	1	1	1	1	1	1	1-18023-1	SCR, SKT HD CAP M4 X 10.0	21
-	4	4	4	4	4	4	18025-2	WASHER, SPRG LOCK, REG M4	20
-	-	1	-	-	1	-	690472-1	STRIPPER	19
△8 -	1	1	1	1	1	1	690518-2	HOLD DOWN, TERMINAL	18
△1 -	1	-	-	1	-	-	1338684-1	HOLDER, SHEAR, NO-CUT	17
-	2	2	2	2	2	2	18023-2	SCR, SKT HD CAP M3 X 6.0	16
△1 -	1	1	1	1	1	1	1-690464-5	SHEAR PLATE, REAR	15
△1 -	-	1	1	-	1	1	1320920-1	SHEAR HOLDER, REAR [CUTTING]	14
△1 -	1	1	1	1	1	1	690463-2	FLOATING SHEAR, REAR	13
-	2	2	2	2	2	2	3-22280-3	SPRING, COMPRESSION	12
-	2	2	2	2	2	2	356885-4	STOP, SHEAR	11
△1 -	-	1	1	-	1	1	1320921-1	SHEAR HOLDER, FRONT, CUT	10
△1 -	1	1	1	1	1	1	462006-1	FLOATING SHEAR, FRONT	9
△1 1	2	2	2	1	1	1	3-1333201-5	ANVIL, COMBINATION	8
-	1	1	1	1	1	1	5-240641-6	SPACER	7
-	1	1	1	1	1	1	690468-1	DEPRESSOR SHEAR, REAR	6
-	1	1	1	1	1	1	2-455889-0	DEPRESSOR, SHEAR	5
-	1	1	1	1	1	1	2-238011-2	BLOCK, CRIMPER SPACER	4
△1 1	2	2	2	1	1	1	4-456134-8	CRIMPER, INSULATION F PREMIUM	3
-	-	-	-	-	-	-	-	-	2
△1 1	2	2	2	1	1	1	1-456402-5	CRIMPER, WIRE PREMIUM	1

THIS DRAWING IS A CONTROLLED DOCUMENT FOR TYCO ELECTRONICS CORPORATION. IT IS SUBJECT TO CHANGE AND THE CONTROLLING ENGINEERING ORGANIZATION SHOULD BE CONTACTED FOR THE LATEST REVISION.

DIMENSIONS: mm [IN]

TOLERANCES UNLESS OTHERWISE SPECIFIED:
0 PLC ±-
1 PLC ±-
2 PLC ±-
3 PLC ±-
4 PLC ±-
ANGLES ±-

MATERIAL - -
FINISH - -

DWN 28MAR06 L LOFTHOUSE
CHK -
APVD 28MAR06 M.CLIFFORD
PRODUCT SPEC -
APPLICATION SPEC See Table
WEIGHT -

tyco Electronics
Tyco Electronics
Harrisburg, PA 17105-3608

NAME FINE ADJUST SIDE FEED HDI APPLICATOR

SIZE	CAGE CODE	DRAWING NO	RESTRICTED TO
A1	00779	C-1528639	-

CUSTOMER DRAWING SCALE 3:5 SHEET 1 OF 1 REV A1

AMP 4805 REV 31MAR2000

Pro/ENGINEER DRAWING