PART NAME	NON-METALLIC ENCLOSURE (STYLE B)	PART No.	NBB-10251 & NBB-10271 & NBB-22251	REV. DATE	6-26-07

MATERIAL:

UL LISTED INDOOR VERSION

SOLID BODY & COVER ____ ABS/PC BLENDED PLASTIC
UL94-5VB FLAMMABILITY RATING

CLEAR COVER _____ POLYCARBONATE PLASTIC
UL94V-0 FLAMMABILITY RATING
UV STABILIZED

ABS VERSION

SOLID BODY & COVER ____ ABS
UL94-HB FLAMMABILITY RATING

ALL VERSIONS

GASKET _____ MODIFIED POLYURETHANE

FINISH:

BODY _____ LIGHT GRAY
COVER _____ LIGHT GRAY OR CLEAR

LATCHES & HINGES _____ NON-METALLIC
WALL MOUNTING BRACKETS ___ STAINLESS STEEL

INTERNAL HINGED PANEL MOUNTING BRACKETS, STAINLESS STEEL LOCKING HASP, AIR AND MOISTURE VENTS AND GALVANIZED STEEL INTERNAL PANEL ARE NOT INCLUDED, BUT CAN BE PURCHASED SEPARATELY.

NOTE: UNIT COMES COMPLETE WITH (4) WALL MOUNTING BRKTS. & (4) M5 x 10mm LG. TRUSS HD. MACHINE SCREWS (NOT SHOWN)

COVER INCLUDES GRAY POLYURETHANE GASKET.

INDUSTRY STANDARDS:

UL LISTED INDOOR VERSION

UL508 TYPE 1, 2, 3, 3R, 4, 4X INDOOR, 12 & 13
NEMA TYPE 1, 2, 3, 3R, 4, 4X, 12 & 13
IEC529-IP65

ABS VERSION

NEMA TYPE 1, 2, 3, 3R, 4, 4X, 12 & 13
IEC529-IP65

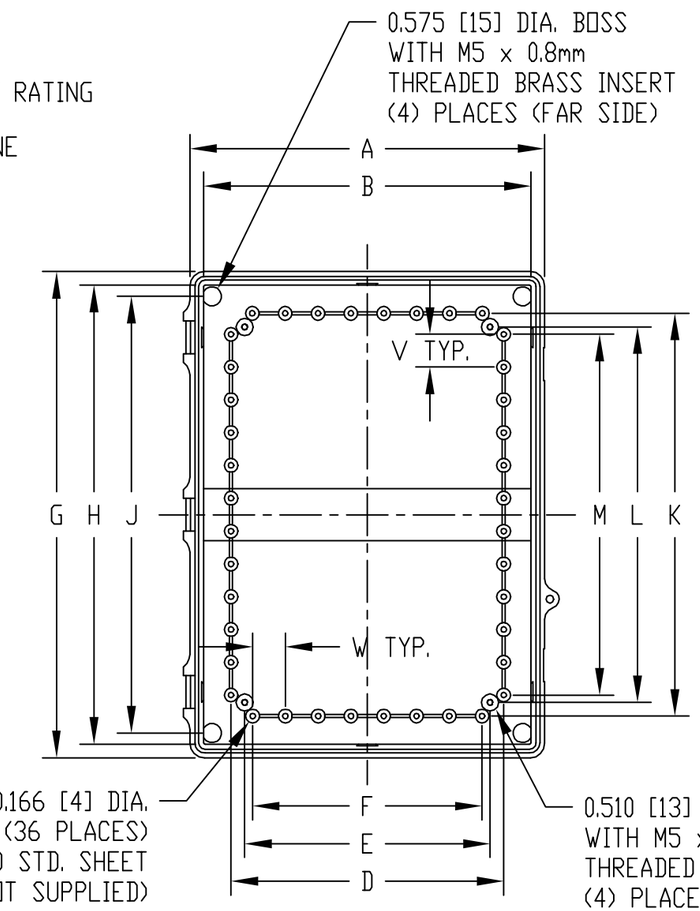

VIEW LESS COVER

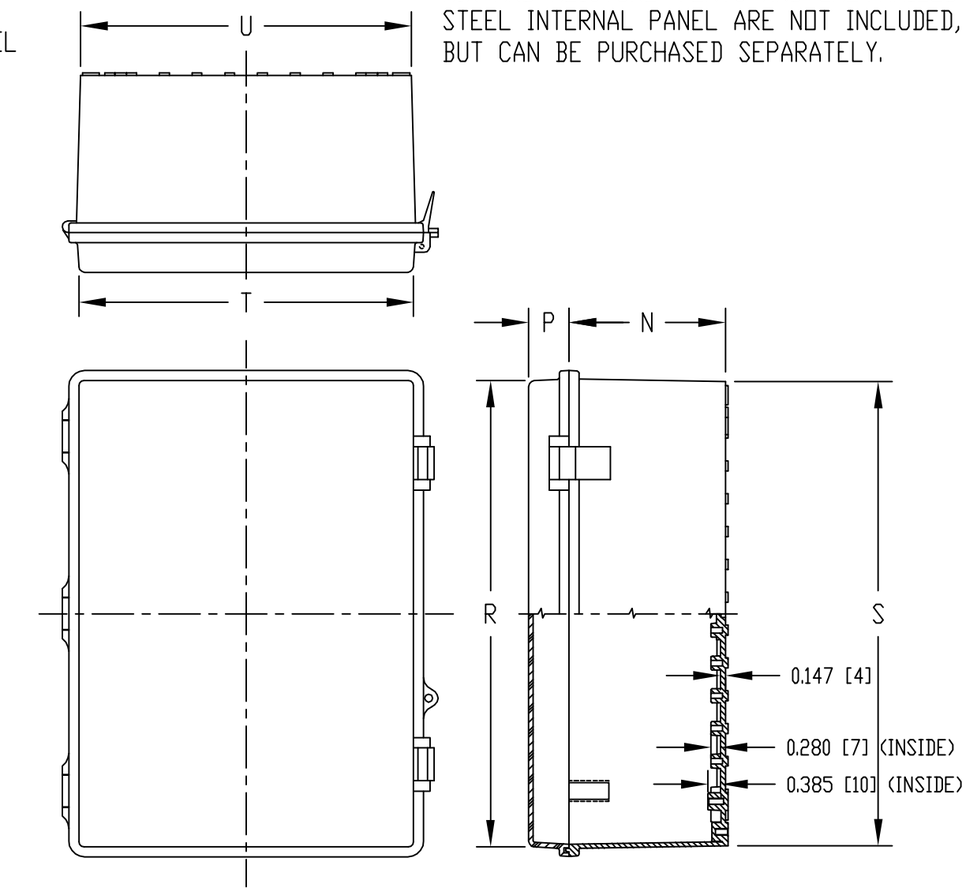

DIMENSIONS = INCHES [MILLIMETERS]

NOTE: ALL DIMENSIONS HAVE ±0.039 [±1] TOLERANCE UNLESS OTHERWISE SPECIFIED

UL LISTED INDOOR VERSION PART NO.		ABS VERSION PART NO.	DIMENSIONS																			
SOLID COVER	CLEAR COVER	SOLID COVER	A	B	C	D	E	F	G	H	J	K	L	M	N	P	R	S	T	U	V	W
NBB-10251	NBB-10271	NBB-22251	10.640 [270]	9.815 [249]	9.313 [236]	8.178 [208]	7.360 [187]	6.881 [175]	14.585 [370]	13.760 [349]	13.096 [333]	12.078 [307]	11.261 [286]	10.821 [275]	4.713 [120]	1.210 [31]	13.995 [355]	13.860 [352]	10.040 [255]	9.925 [252]	0.983 [25]	0.983 [25]