THIS DRAWING IS UNPUBLISHED. RELEASED FOR PUBLICATION -,N/A .
© COPYRIGHT N/A BY TYCO ELECTRONICS CORPORATION. ALL RIGHTS RESERVED.

LOC	DIST
DF	SO

REVISIONS

P	LTR	DESCRIPTION	DATE	DWN	APVD
	AC	REV PER ECO-05-002357	08-05	AA	DE

1. MARKED PER MIL-STD-130.
2. TO MATE WITH AMP LGH-1L RECEPTACLE WITH 1.69 BARREL DEPTH.

(3) PIGTAILS ARE SOLDER DIPPED.

(4) INSULATION CUT, BUT NOT REMOVED.

AMP P/N	A	B	C	D	E	F	REMARKS	
846938-1	14.00±.12 [355.6±3.0]	.38 [9.7]	2.00 [50.8]	3.00 [76.2]	6.00 [152.4]	– –	(3)	OBSOLETE
846938-2	11.00±.12 [279.4±3.0]	.62 [15.7]	2.00 [50.8]	3.00 [76.2]	6.00 [152.4]	– –	(3)	OBSOLETE
846938-3	11.50±.12 [292.1±3.0]	.62 [15.7]	2.00 [50.8]	3.00 [76.2]	6.00 [152.4]	– –	(3)	
846938-4	11.12±.12 [282.5±3.0]	.38 [9.7]	2.00 [50.8]	4.50 [114.3]	6.00 [152.4]	– –	(3)	OBSOLETE
846938-5	11.50±.12 [292.1±3.0]	.62 [15.7]	2.00 [50.8]	3.00 [76.2]	6.00 [152.4]	– –	(3)	OBSOLETE
846938-6	26.00±.26 [660.4±6.6]	.38 [9.7]	2.00 [50.8]	3.00 [76.2]	6.00 [152.4]	– –	(3)	OBSOLETE
846938-7	25.50±.25 [647.7±6.4]	.38 [9.7]	1.50 [38.1]	3.00 [76.2]	6.00 [152.4]	6.00 [152.4]	(3)	OBSOLETE
846938-8	48.00±.48 [1219.2±6.4]	.38 [9.7]	2.00 [50.8]	3.00 [76.2]	6.00 [152.4]	– –	(3)	
846938-9	11.50±.12 [292.1±3.0]	.62 [15.7]	.75 [19.1]	3.00 [76.2]	6.00 [152.4]	– –	(3)	OBSOLETE
1-846938-0	72.00±.72 [1828.8±18.3]	.38 [9.65]	2.00 [50.8]	3.00 [76.2]	6.00 [152.4]	6.00 [152.4]	(3)	OBSOLETE
1-846938-1	192.00±1.92 [4876.8±48.8]	.38 [9.65]	2.00 [50.8]	3.00 [76.2]	6.00 [152.4]	6.00 [152.4]	(3)	OBSOLETE
1-846938-2	288.00±2.88 [7315.2±73.2]	.38 [9.65]	2.00 [50.8]	3.00 [76.2]	6.00 [152.4]	6.00 [152.4]	(3)	OBSOLETE
1-846938-3	10.00±.12 [254.0±3.0]	.38 [9.65]	2.00 [50.8]	3.00 [76.2]	6.00 [152.4]	6.00 [152.4]	(3)	
1-846938-4	51.00±.50 [1295.4±.7]	.38 [9.65]	8.00 [203.2]	3.00 [76.2]	– –	6.00 [152.4]	(3)	OBSOLETE
1-846938-5	41.00±.41 [1041.4±10.4]	.38 [9.65]	13.00 [330.2]	3.00 [76.2]	– –	6.00 [152.4]	(3)	OBSOLETE
1-846938-6	36.00±.36 [914.4±9.1]	.38 [9.65]	13.00 [330.2]	3.00 [76.2]	– –	6.00 [152.4]	(3)	
1-846938-7	50.00±.50 [1270.0±12.7]	.38 [9.65]	24.00 [609.6]	3.00 [76.2]	– –	6.00 [152.4]	(3)	OBSOLETE
1-846938-8	128.00±1.28 [3251.2±32.5]	.38 [9.65]	35.00 [889.0]	3.00 [76.2]	– –	6.00 [152.4]	(3)	OBSOLETE
1-846938-9	17.00±.12 [431.8±3.0]	.38 [9.65]	2.00 [50.8]	3.00 [76.2]	6.00 [152.4]	6.00 [152.4]	(3)	OBSOLETE
2-846938-0	18.00±.12 [457.2±3.0]	.38 [9.65]	2.00 [50.8]	3.00 [76.2]	6.00 [152.4]	6.00 [152.4]	(3)	
2-846938-1	24.00±.12 [609.6±3.0]	.38 [9.65]	2.00 [50.8]	3.00 [76.2]	6.00 [152.4]	6.00 [152.4]	(3)	
2-846938-2	480.00±4.80 [12192±121.9]	.38 [9.65]	2.00 [50.8]	3.00 [76.2]	6.00 [152.4]	6.00 [152.4]	(3)	OBSOLETE
2-846938-3	240.00±2.40 [6096.0±61.0]	.38 [9.65]	2.00 [50.8]	3.00 [76.2]	6.00 [152.4]	6.00 [152.4]	(3)	OBSOLETE
2-846938-4	8.00±.12 [203.2±3.0]	.38 [9.65]	2.00 [50.8]	3.00 [76.2]	6.00 [152.4]	– –	(3)	OBSOLETE
2-846938-5	120.00±1.20 [3048.0±30.5]	.38 [9.65]	5.00 [127.0]	3.00 [76.2]	6.00 [152.4]	6.00 –	(3)	OBSOLETE
2-846938-6	40.00±.40 [1016.0±10.2]	.38 [9.65]	2.00 [50.8]	3.00 [76.2]	6.00 [152.4]	– –	(3)	OBSOLETE
2-846938-7	80.00±.80 [2032±20.3]	.38 [9.65]	2.00 [50.8]	3.00 [76.2]	6.00 [152.4]	– –	(3)	
2-846938-8	20.00±.12 [508.0±3.0]	.38 [9.65]	2.00 [50.8]	3.00 [76.2]	6.00 [152.4]	– –	(3)	OBSOLETE
2-846938-9	20.00±.12 [508.0±3.0]	.38 [9.65]	2.00 [50.8]	3.00 [76.2]	8.00 [203.2]	– –	(3)	OBSOLETE
3-846938-0	31.00±.31 [787.4±7.9]	.38 [9.65]	20.00 [508.0]	3.00 [76.2]	6.00 [152.4]	– –	(3)	OBSOLETE
3-846938-1	96.00±.96 [2438.4±24.4]	.38 [9.65]	3.00 [76.2]	3.00 [76.2]	6.00 [152.4]	6.00 [152.4]	(3)	OBSOLETE
3-846938-2	96.00±.96 [2438.4±24.4]	.38 [9.65]	3.00 [76.2]	3.00 [76.2]	12.00 [304.8]	12.00 [304.8]	(3)	OBSOLETE
3-846938-3	60.00±.60 [1524.0±15.3]	.38 [9.65]	3.00 [50.8]	3.00 [76.2]	6.00 [152.4]	6.00 [152.4]	(3)	OBSOLETE
3-846938-4	29.00±.29 [736.6±7.4]	.38 [9.65]	3.00 [76.2]	3.00 [76.2]	6.00 [152.4]	6.00 [152.4]	(3)	OBSOLETE
3-846938-5	29.00±.29 [736.6±7.4]	.38 [9.65]	20.00 [508.0]	3.00 [76.2]	6.00 [152.4]	6.00 [152.4]	(3)	
3-846938-6	48.00±.48 [1219.2±12.2]	.38 [9.65]	2.00 [50.8]	3.00 [76.2]	12.00 [304.8]	12.00 [304.8]	(3)	OBSOLETE
3-846938-7	300.00±3.00 [7620.0±76.2]	.38 [9.65]	3.00 [76.2]	3.00 [76.2]	6.00 [152.4]	6.00 [152.4]	(3)	OBSOLETE
3-846938-8	11.50±.12 [292.1±3.0]	.62 [15.7]	3.00 [76.2]	3.00 [76.2]	6.00 [152.4]	– –	(3)	
3-846938-9	12.50±.12 [317.5±3.0]	.62 [15.7]	2.00 [50.8]	3.00 [76.2]	6.00 [152.4]	– –	(3)	
6-846938-3	10.00±.12 [254.0±3.0]	.38 [9.65]	2.00 [50.8]	3.00 [76.2]	6.00 [152.4]	6.00 [152.4]	(4)	
8-846938-5	29.00±.29 [736.6±7.4]	.38 [9.65]	20.00 [508.0]	3.00 [76.2]	6.00 [152.4]	6.00 [152.4]	(4)	

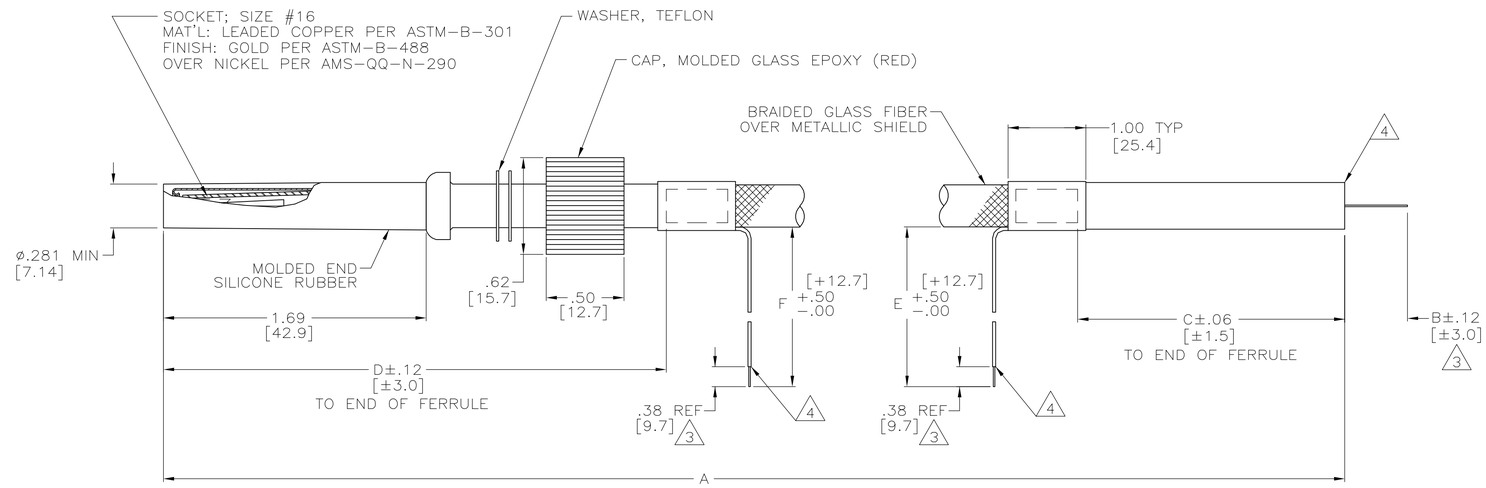

THIS DRAWING IS A CONTROLLED DOCUMENT.

DIMENSIONS: INCHES [mm]

TOLERANCES UNLESS OTHERWISE SPECIFIED:
0 PLC ± –
1 PLC ± –
2 PLC ± .02 [0.5]
3 PLC ± .005 [0.13]
4 PLC ± –
ANGLES ± –

MATERIAL: SEE CALLOUTS
FINISH: SEE CALLOUTS

DWN T.THOMPSON 28-APR-93
CHK S.GLATFELTER 28-MAY-93
APVD S.GLATFELTER 28-MAY-93
PRODUCT SPEC —
APPLICATION SPEC —
WEIGHT —

tyco Electronics
Tyco Electronics Corporation
Harrisburg, Pa 17105-3608

NAME
LEAD ASSY, ELECTRICAL
MOLDED END WITH SHIELD & GLASS BRAID JACKET
LGH-1L

SIZE	CAGE CODE	DRAWING NO	RESTRICTED TO
A1	00779	C-846938	—

CUSTOMER DRAWING

SCALE	SHEET	OF	REV
2:1	1	1	AC