MATERIAL NUMBER	ENGINEERING NUMBER
1300580057	RJBG16821

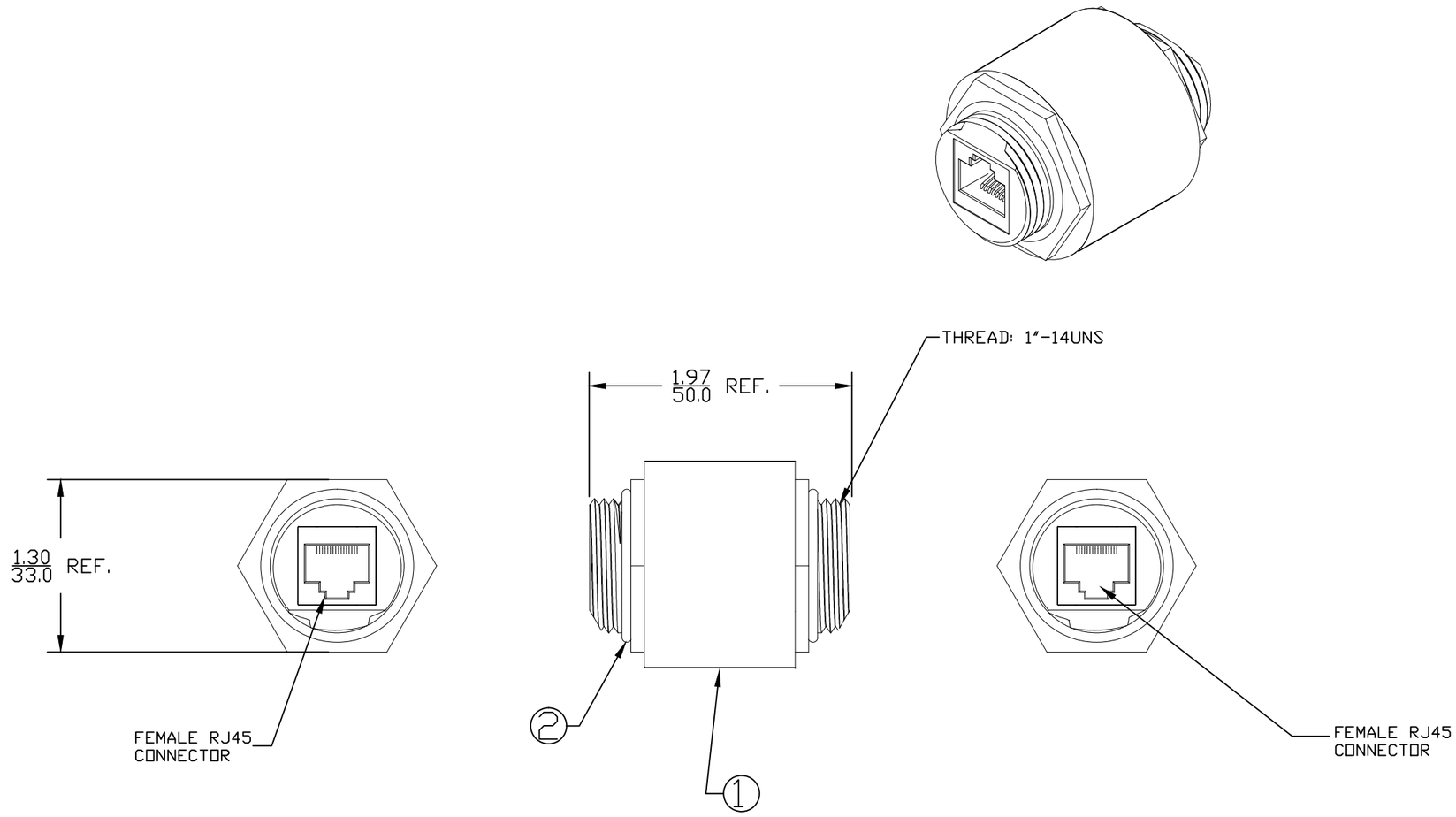

NOTES:

1) MATERIAL: SEE TABLE
2) FINISHES: SEE TABLE
3) ELECTRICAL DATA:
   VOLTAGE RATING: 125 VDC
   CURRENT RATING: 1.5A
   CATEGORY RATING: CAT5
4) ENVIRONMENTAL:
   PROTECTION IP67
   OPERATING TEMPERATURE RANGE: -20C TO 80C

ITEM	QTY.	DESCRIPTION	MATERIAL	FINISH
2	2	O-RING	VITON	BLACK
1	1	RECEPTACLE HOUSING	DELRIN	BLACK

RELEASE
EC NO: IPG2013-1986 6/24/13
DRWN: EBRACKEN
CH'KD: --
APPR: BWOODMAN 2010/01/22
DESCRIPTION
REV B

QUALITY SYMBOLS
▼=0
Ⓒ=0

GENERAL TOLERANCES (UNLESS SPECIFIED)

	mm	INCH
4 PLACES	±---	±---
3 PLACES	±---	±.005
2 PLACES	±0.13	±.010
1 PLACE	±0.25	±.020
ANGULAR ±1/2°		

DRAFT WHERE APPLICABLE MUST REMAIN WITHIN DIMENSIONS

DIMENSION STYLE: IN/MM
SCALE: 1:1
DESIGN UNITS: INCH
THIRD ANGLE PROJECTION

DRAWN BY: ---- DATE: ----
CHECKED BY: BWOODMAN DATE: ----
APPROVED BY: JFMURPHY DATE: 2010/01/22

TITLE
RJ-LNXX ADAPTOR
RJ45 FEMALE TO FEMALE ADAPTOR

molex MOLEX INCORPORATED

MATERIAL NO.: SEE CHART
DOCUMENT NO.: SD-130058-006
SHEET NO.: 1 OF 1
SIZE: B

THIS DRAWING CONTAINS INFORMATION THAT IS PROPRIETARY TO MOLEX INCORPORATED AND SHOULD NOT BE USED WITHOUT WRITTEN PERMISSION