THIS DRAWING IS UNPUBLISHED. RELEASED FOR PUBLICATION -,- .
© COPYRIGHT - BY TYCO ELECTRONICS CORPORATION. ALL INTERNATIONAL RIGHTS RESERVED.

LOC	DIST
G	14

REVISIONS

P	LTR	DESCRIPTION	DATE	DWN	APVD
	E1	REDRAWN PER ECR 09-006116	17MAR09	JR	TM

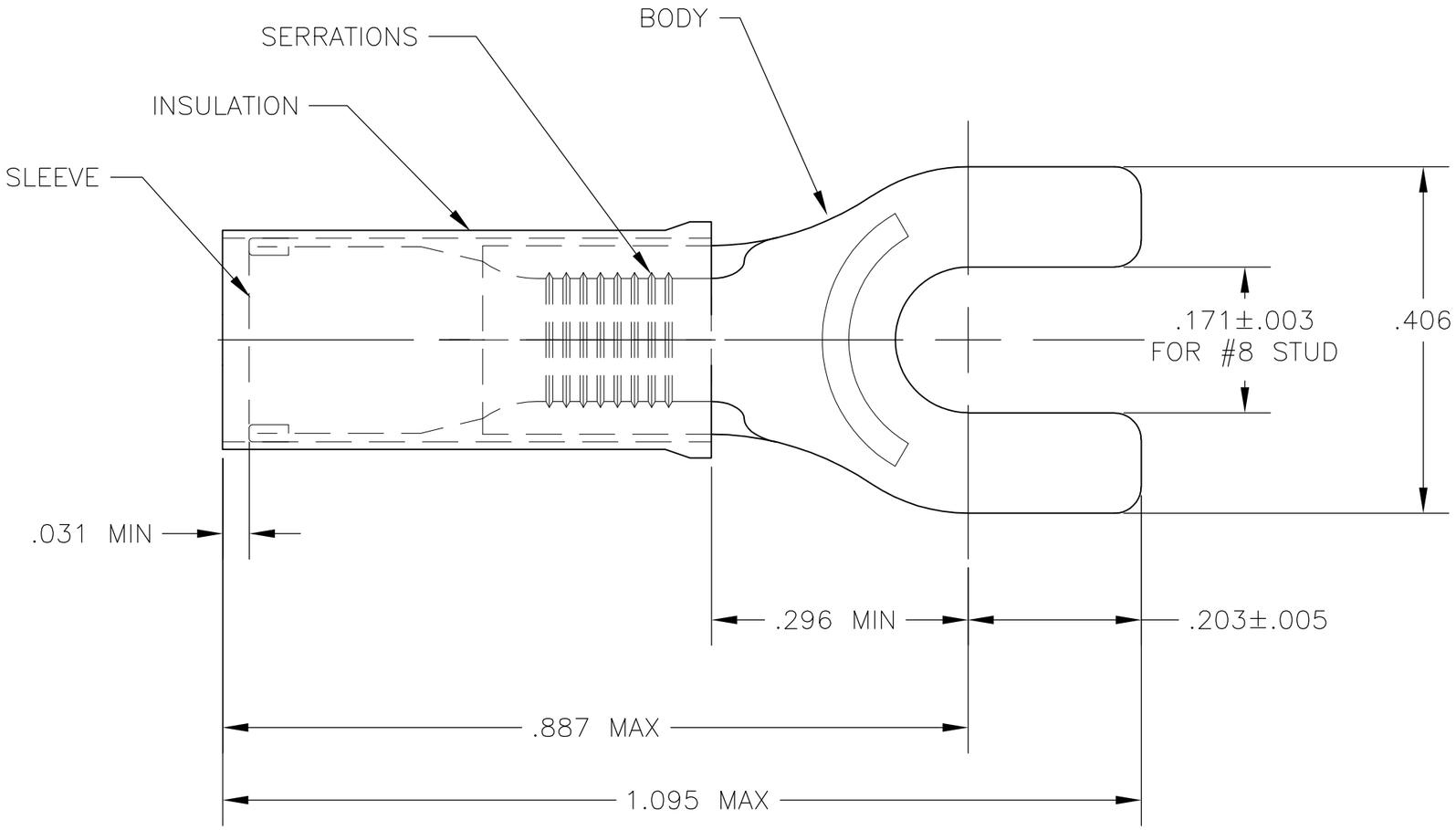

1 FOR .150 TO .250 WIRE INSULATION DIA.

2 MATERIAL TONGUE THK IS .040±.002

DESCRIPTION	MATERIAL	PART NO
LOOSE PIECE, BOX	INSULATION: NYLON, COLOR YELLOW SLEEVE: COPPER PER ASTM B152 BODY: COPPER PER ASTM B152 TIN PLATE PER ASTM B545	8-35152-2
35152 ON TAPE		2-35152-1
WIRE TERMINAL		35152

THIS DRAWING IS A CONTROLLED DOCUMENT.

DIMENSIONS: INCHES

TOLERANCES UNLESS OTHERWISE SPECIFIED:
0 PLC ± -
1 PLC ± -
2 PLC ± -
3 PLC ± .008
4 PLC ± -
ANGLES ± 5°

MATERIAL: SEE TABLE

FINISH: SEE TABLE

DWN jr ruth 17MAR09
CHK TOM MICHIELUTTI 17MAR09
APVD TOM MICHIELUTTI 17MAR09
PRODUCT SPEC —
APPLICATION SPEC —
WEIGHT —

Tyco Electronics
Tyco Electronics Corporation
Harrisburg, PA 17105-3608

NAME
TERMINAL, PIDG
SPADE, WIRE SIZE 12-10 AWG
—

SIZE	CAGE CODE	DRAWING NO	RESTRICTED TO
A3	00779	C-35152	—

CUSTOMER DRAWING

SCALE	SHEET	REV
8:1	1 OF 1	E1

1470-19 (1/08)