samtec

E.L.P.™
EXTENDED LIFE PRODUCT
10 year Mixed Flowing Gas with 30µ" Gold
Call Samtec for maximum mated cycles

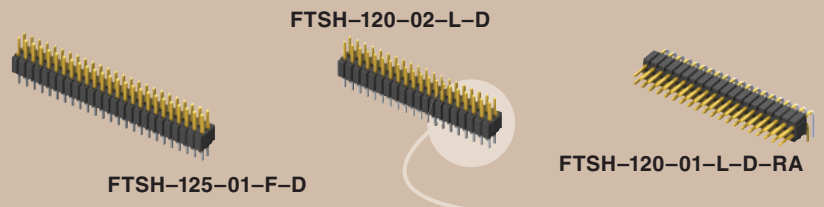

(1,27 mm) .050"

FTSH SERIES

THROUGH-HOLE MICRO HEADER

SPECIFICATIONS

For complete specifications see www.samtec.com?FTSH

Insulator Material:
Black Liquid Crystal Polymer
Terminal Material:
Phosphor Bronze
Plating:
Sn or Au over 50µ" (1,27 µm) Ni
Current Rating (FTSH/CLP):
3.3 A per pin
(1 pin powered per row)
Operating Temp Range:
-55°C to +125°C
RoHS Compliant:
Yes

Processing:

Lead-Free Solderable:
Yes

Mates with:
FFSD, FFTP, CLP, FLE

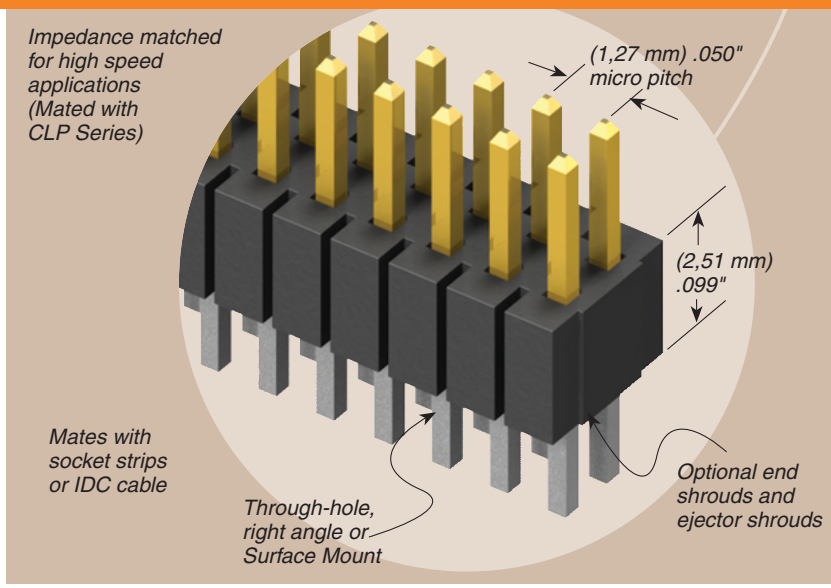

RECOGNITIONS

For complete scope of recognitions see www.samtec.com/quality

FILE NO. E111594
FILE NO: 090871_0_000

LOCKING CLIP

For single mating cycle with the FFSD.
Specify -LC after tail option.
Lead Style -01 and 10 pins/row minimum.
5-9 pins/row not available in combination with keying shroud (-K).

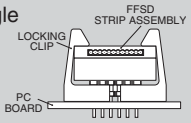

ALSO AVAILABLE
(MOQ Required)

- Molded Pick & Pick pads
- Other platings

Contact Samtec.

Note: See SFM/TFM for positive alignment feature.

Note: Some sizes, styles and options are non-standard, non-returnable.

FTSH	–	1	NO. PINS PER ROW	–	LEAD STYLE	–	PLATING OPTION	–	D	–	OPTION	–	TAIL OPTION	–	OTHER OPTIONS
			02 thru 50		Specify LEAD STYLE from chart		–F = Gold flash on post, Matte Tin on tail –L = 10µ" (0,25 µm) Gold on post, Matte Tin on tail				Leave blank for Right Angle –"XXX" = Polarized Position (Specify position of omited pin) (Not available with -EX options)		Leave blank for straight tail –RA = Right Angle		–ES = End Shroud (Style –02 & –03) 9 pins/row min. –EP = End Shroud with Guide Post (Style –02 & –03) 9 pins/row min. –EL = End Shroud with Board Lock (Style –02 & –03) 9 pins/row min. –EJ = Ejector Shroud (Style –01 only) 10 pins/row min. 25 pins/row max. –RA not available –K = Keying Shroud (For mating with FFSD Style –01 only, 05, 08, 10, 13, 17, 20 & 25 pins/row only and 13, 17, 20 & 25 only with shrouds)

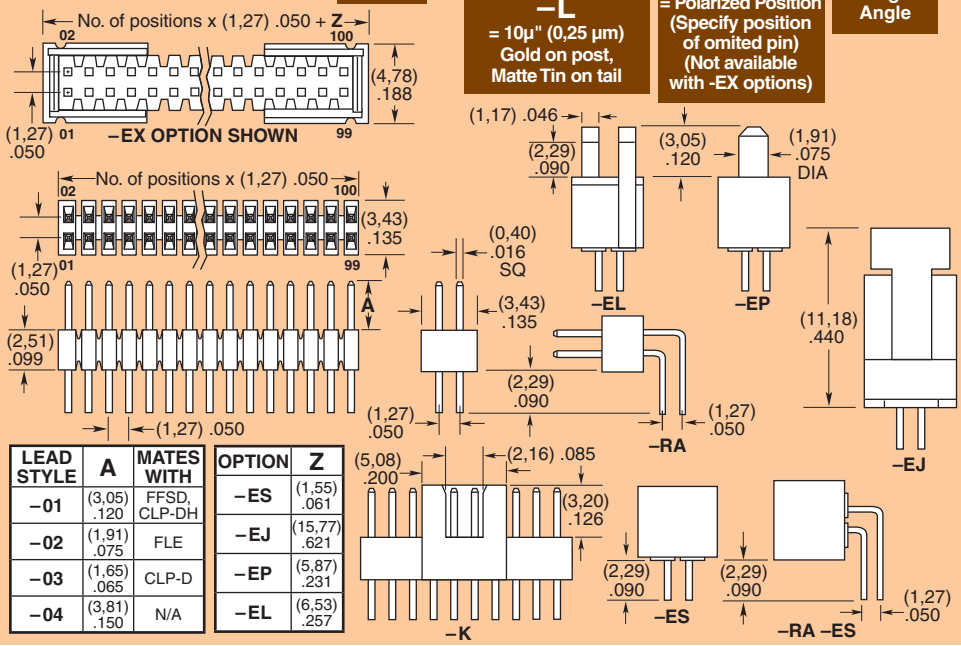

LEAD STYLE	A	MATES WITH
–01	(3,05) .120	FFSD, CLP-DH
–02	(1,91) .075	FLE
–03	(1,65) .065	CLP-D
–04	(3,81) .150	N/A

OPTION	Z
–ES	(1,55) .061
–EJ	(15,77) .621
–EP	(5,87) .231
–EL	(6,53) .257

Due to technical progress, all designs, specifications and components are subject to change without notice.

SAMTEC USA • Tel: +1-800-SAMTEC-9 or +1-812-944-6733 SAMTEC NORTHERN CALIFORNIA • Tel: +1-408-395-5900 SAMTEC SOUTHERN CALIFORNIA • Tel: +1-800-726-8329
SAMTEC SOUTH AMERICA • Tel: +55 31 3786 3227 SAMTEC UNITED KINGDOM • Tel: +44 01236 739292 SAMTEC GERMANY • Tel: +49 (0) 89 / 89460-0
SAMTEC FRANCE • Tel: +33 1 60 95 06 60 SAMTEC ITALY • Tel: +39 039 6890337 SAMTEC NORDIC/BALTIC • Tel: +46 8 4477280 SAMTEC BENELUX • Tel: +44 01236 739292
SAMTEC ISRAEL • Tel: +972 3 7526600 SAMTEC INDIA • Tel: +91 80 3272 1612 SAMTEC ANZ • Tel: +613 9580 0683 SAMTEC SINGAPORE • Tel: +65 6745 5955 SAMTEC JAPAN • Tel: +81 45 475 1385
SAMTEC SHANGHAI • Tel: +86 21 6083 3766 SAMTEC SHENZHEN • Tel: +86 755 83776780 SAMTEC TAIWAN • Tel: +886 2 2735 6109 SAMTEC HONG KONG • Tel: +852 26904858 SAMTEC KOREA • Tel: +82 31 717 5685