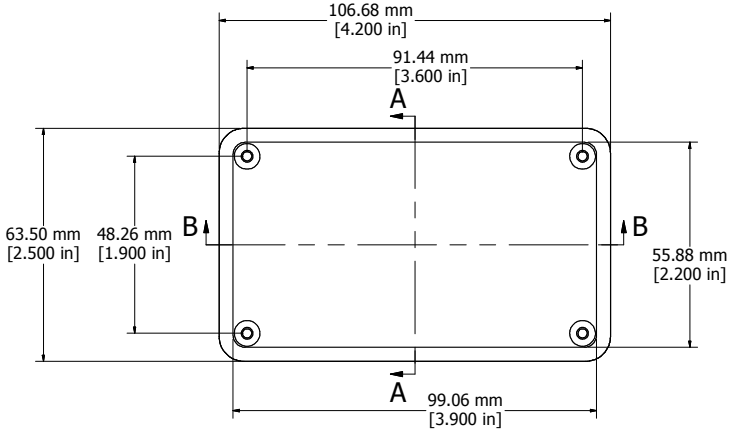

ASSEMBLY - TOP VIEW

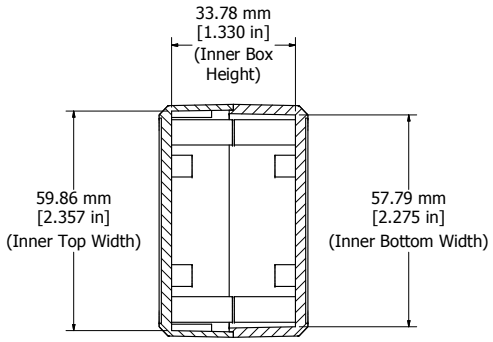

SECTION A-A

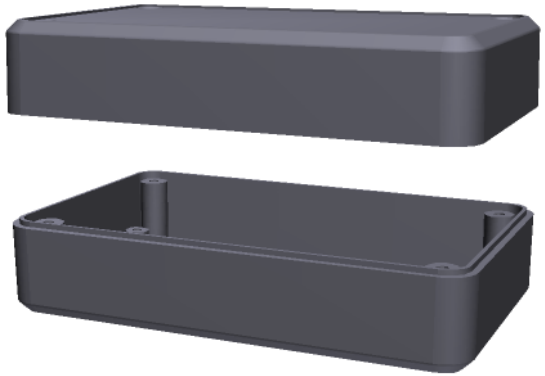

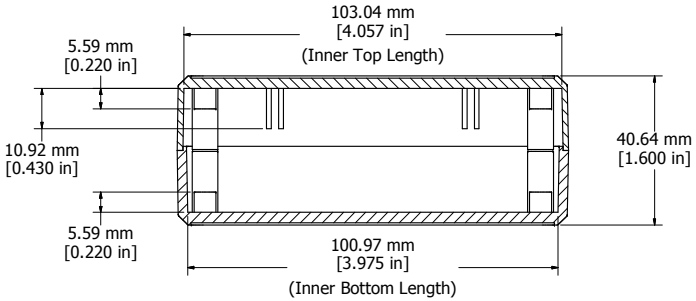

SECTION B-B

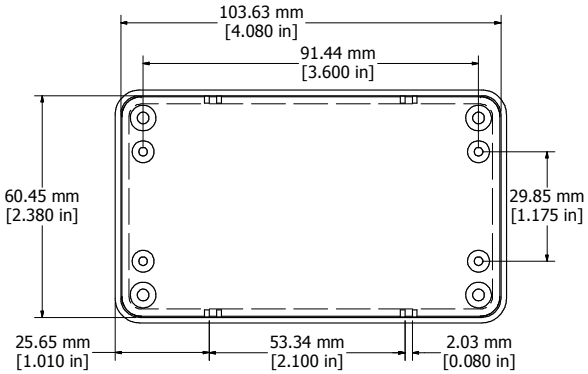

TOP - INSIDE

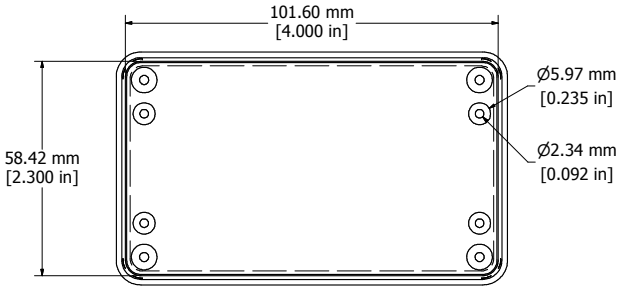

BOTTOM - INSIDE

Enclosures can be Factory Modified (Milling, Drilling, Printing etc.)
Contact Factory mjm@hammondmfg.com for quotes
Solid models of this enclosure available in STEP or IGES.

RL6015
Material: ABS (UL94-HB), Light Gray color
Lid Screws: M3 x 25
Circuit Board Screws, 4 Supplied (M3 self tap)
Suggested Lid Screw Torque: 30 ozf-in (21 cN-m)

HAMMOND MANUFACTURING™

RL6015

www.hammondmfg.com