DRAWING MADE IN THIRD ANGLE PROJECTION

THIS DRAWING IS UNPUBLISHED. RELEASED FOR PUBLICATION .18 .
© COPYRIGHT 19 BY AMP INCORPORATED. ALL INTERNATIONAL RIGHTS RESERVED.

WKS	LOC	DIST	P	F
18	BD	39		

REVISIONS

ZONE	LTR	DESCRIPTION	DATE	APPD
	G	REDRAWN	8/12/91	–

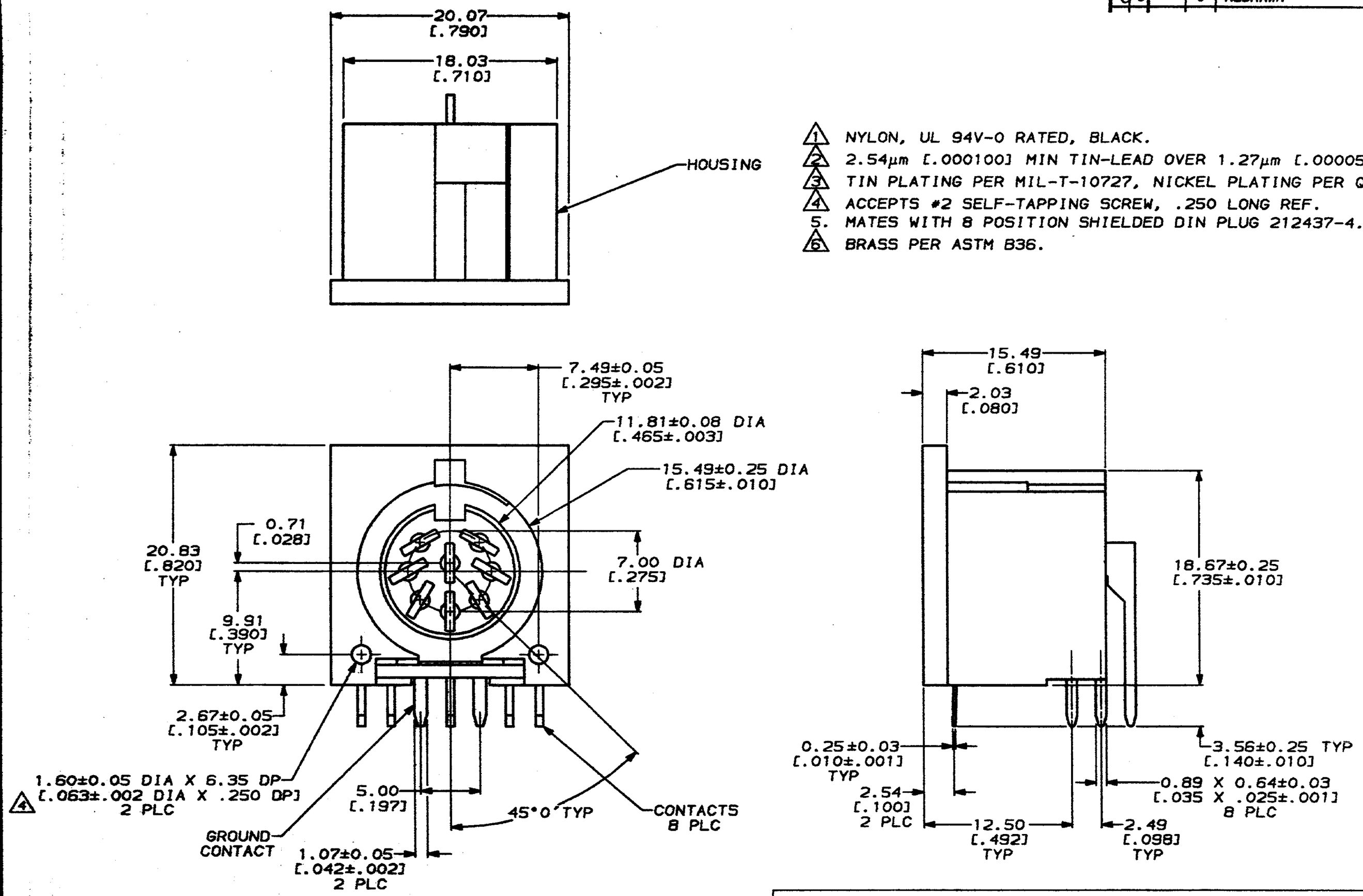

1. NYLON, UL 94V-0 RATED, BLACK.
2. 2.54μm [.000100] MIN TIN-LEAD OVER 1.27μm [.000050] MIN NICKEL.
3. TIN PLATING PER MIL-T-10727, NICKEL PLATING PER QQ-N-290.
4. ACCEPTS #2 SELF-TAPPING SCREW, .250 LONG REF.
5. MATES WITH 8 POSITION SHIELDED DIN PLUG 212437-4.
6. BRASS PER ASTM B36.

211511-1
PART NUMBER

211511

DO NOT SCALE PRINT.
UNLESS SPECIFIED
DIMENSIONS IN mm [INCHES]
TOLERANCES ON :
2 PLC DEC ±0.13 [.005]
3 PLC DEC ± –
ANGLES ± 0°30'

MATERIAL
HOUSING: 1
CONTACTS: 6
GROUND CONTACT: 6

FINISH
FINISH: 3
CONTACTS: 2
GROUND CONTACT: 2

DR 8/12/91 A.STAUB B6
CHK – 11-26-91
APPD – 11-26-91
APPD – 11-26-91

PRODUCT SPEC 108-10047
APPLICATION SPEC 114-40025
WEIGHT –

AMP Incorporated
Harrisburg, PA 17105-3608

NAME
RECEPTACLE ASSY, RIGHT ANGLE, 8 POSITION, CIRCULAR DIN

SIZE	CAGE CODE	DRAWING NO
C	00779	211511
SCALE 4:1		SHEET 1 OF 1

CUSTOMER DRAWING