THIS DRAWING IS UNPUBLISHED. RELEASED FOR PUBLICATION 2011
© COPYRIGHT 2011 - ALL RIGHTS RESERVED.

| LOC | DIST |
|---|---|
| A1 | - |

REVISIONS

| P | LTR | DESCRIPTION | DATE | DWN | APVD |
|---|---|---|---|---|---|
| | C21 | NOTE 7 ADDED. ECR-15-007039 | 06MAY2015 | Abr | Brun |
| | C22 | GOLD VARIANT UPDATE | 03MAY2016 | Ho. | Brun |
| | C23 | NOTE 6 REMOVED IN TABLE AT WIRE SIZE 0.25-0.35 | 21FEB2017 | MAH. | BRUN |
| | C24 | PN 5-962886-3. 5-965908-3 added | 18SEP2017 | BREN | STOT |

## Normale Anwendung
## USUAL APPLICATION

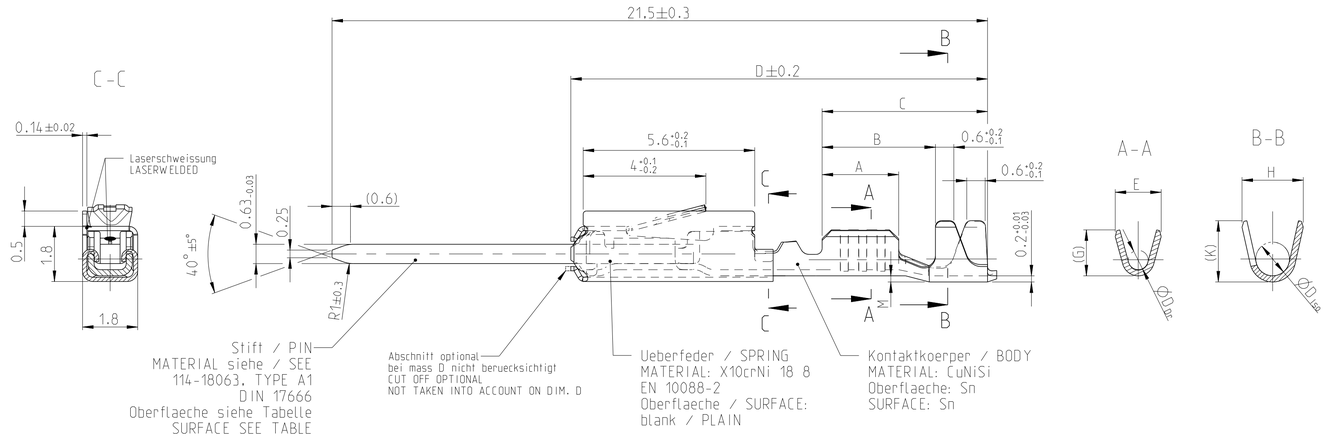


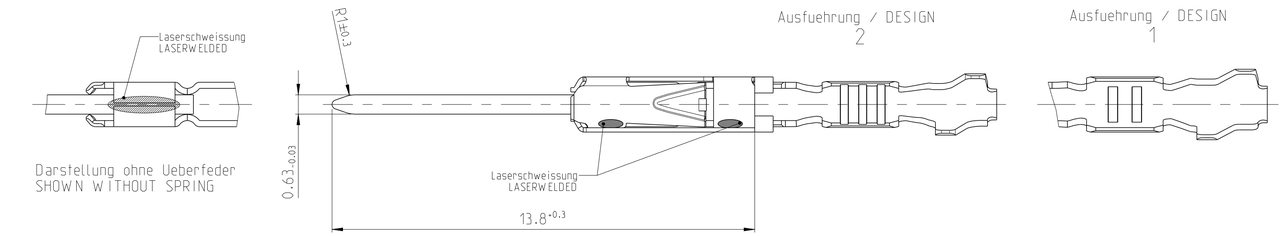


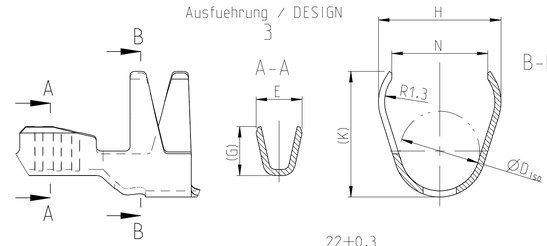


## Einzeldichtungssytem
## SINGLE WIRE SEAL SYSTEM

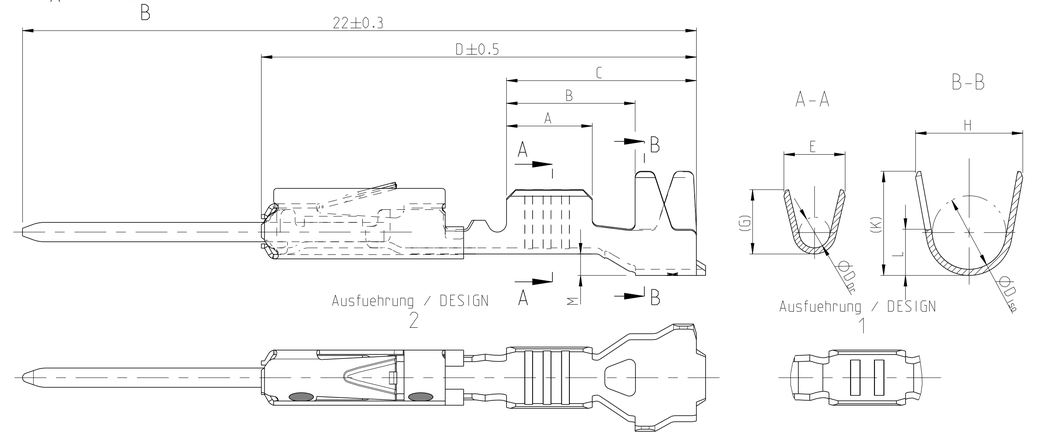


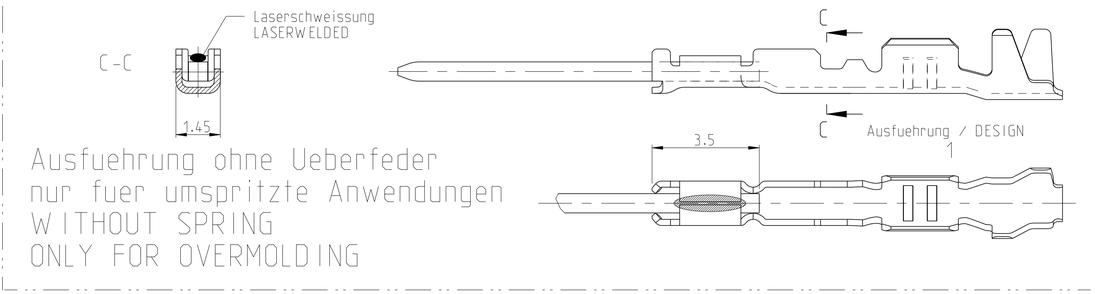


## Ausfuehrung ohne Ueberfeder
## nur fuer umspritzte Anwendungen
## WITHOUT SPRING
## ONLY FOR OVERMOLDING

| Bestell-Nr. Ausfuehrung ORDER NO. DESIGN 2 | Bestell-Nr. Ausfuehrung ORDER NO. DESIGN 3 | Rev | Bestell-Nr. Ausfuehrung ORDER NO. DESIGN 1 △5 | Rev | Ueberfeder vorhanden SPRING AVAILABLE | VERSION | DGB Wire Size Range mm² | Oberflaeche SURFACE | Laenge LENGTH mm | Drahtcrimp WIRE CRIMP mm | Iso-crimp INSU-CRIMP mm | Gewicht WEIGHT g | Verarbeitung Spez. APPLICATION SPEC. | DGB Wire Size Range mm² | Isolations Ø INSULATION DIA. mm | fuer Kammer Ø3.45 FOR CAVITY DIA. 3.45 mm | Blindstopfen RUBBER PLUG | fuer Kammer Ø4 FOR CAVITY DIA. 4 mm | Blindstopfen RUBBER PLUG |
|---|---|---|---|---|---|---|---|---|---|---|---|---|---|---|---|---|---|---|---|
| 5-965908-3 | ⬡C24 | A | | | ja / YES | Einzeldichtungssystem SINGLE WIRE SEAL SYSTEM | 0.50-0.75 | Ag | A = 2.8 B = 4.2 C = 6.2 D = 14.3 M = 0.7 | E = 2 G = 2.1 $D_{Dr}$ = 1 | H = 3.5 K = 3.4 L = 1.5 $D_{Iso}$ = 2.4 | 0.18 | 114-18025 | 0.75 0.5 | 1.4-1.9 | 967067-1 gruen GREEN | 967056-1 blau / BLUE | 963142-1 schwarz BLACK | 963143-1 weiss / WHITE |
| 5-965908-2 | | F | 965908-2 | E | ja / YES | | | Au | | | | | | | | | | | |
| 5-965908-1 | | D | 965908-1 | C | ja / YES | | | Sn | | | | | | | | | | | |
| - | | - | 1-962886-1 | N | nein / NO | | 0.25-0.35 | Sn | A = 2.5 B = 3.9 C = 5.9 D = 14 M = 0.7 | E = 1.8 G = 1.8 $D_{Dr}$ = 0.8 | H = 3.5 K = 3.4 L = 1.5 $D_{Iso}$ = 2.4 | 0.12 | | 0.35 0.2 | 0.9-1.4 | 967067-2 gelb YELLOW | | 963142-2 grau GREY | |
| 5-962886-3 | ⬡C24 | A | | | ja / YES | | | Ag | | | | 0.16 | | | | | | | |
| 5-962886-2 | | R | 962886-2 | M | ja / YES | | | Au | | | | | | | | | | | |
| 5-962886-1 | | N | 962886-1 | M | ja / YES | | | Sn | | | | | | | | | | | |
| | 2141830-3 | A | | | ja / YES | | 0.13/0.17 △6 | Ag | A = 2.5 B = 4 C = 5.9 D = 13.9 M = 0.6 | E = 1.5 G = 1.4 | H = 4 K = 3.9 N = 3.1 $D_{Iso}$ = 2.6 | 0.15 | | 0.13 0.17 | 0.85-1.25 | 967067-2 gelb YELLOW | | 963142-2 grau GREY | |
| | 2141830-2 | A | | | ja / YES | | | Au | | | | | | | | | | | |
| | 2141830-1 | A | | | ja / YES | | | Sn | | | | | | | | | | | |
| 6-963716-2 | | A | | | nein / NO | normale Anwendung USUAL APPLICATION | 0.50-0.75 | Au | A = 2.8 B = 3.8 C = 5.6 D = 13.65 M = 0.2 | E = 2 G = 2.1 $D_{Dr}$ = 1 | H = 2.7 K = 2.9 L = 0.7 $D_{Iso}$ = 1.6 | 0.17 | 114-18021 | | | | | | |
| 6-963716-1 | | A | | | nein / NO | | | Sn | | | | 0.12 | | | | | | | |
| - | | - | 1-963716-2 | B | nein / NO | | | Au | | | | | | | | | | | |
| 5-963716-3 | | A | | | ja / YES | | | Ag | | | | 0.17 | | | | | | | |
| 5-963716-2 | | Z | 963716-2 | Y | ja / YES | | | Au | | | | | | | | | | | |
| 5-963716-1 | | W | 963716-1 | V | ja / YES | | | Sn | | | | | | | | | | | |
| 6-928918-3 | | A | | | ja / YES | | 0.25-0.35 | Ag | A = 2.5 B = 3.6 C = 5.6 D = 13.65 M = 0.2 | E = 1.8 G = 1.8 $D_{Dr}$ = 0.8 | H = 2.3 K = 2.3 L = 0.6 $D_{Iso}$ = 1.4 | 0.16 | | | | | | | |
| 6-928918-2 | | Z | 1-928918-2 | Y | ja / YES | | | Au | | | | | | | | | | | |
| 6-928918-1 | | W | 1-928918-1 | V | ja / YES | | | Sn | | | | | | | | | | | |
| 5-928918-2 | | A | 928918-2 | Y | nein / NO | | | Au | | | | | | | | | | | |
| 5-928918-1 | | W | 928918-1 | V | nein / NO | | | Sn | | | | 0.12 | | | | | | | |
| | 2141828-3 | A | | | ja / YES | | 0.13/0.17 △6 | Ag | A = 2.5 B = 3.7 C = 5.4 D = 13.65 M = 0 | E = 1.5 G = 1.4 | H = 2 K = 1.9 $D_{Iso}$ = 1.1 | 0.15 | | | | | | | |
| | 2141828-2 | A | | | ja / YES | | | Au | | | | | | | | | | | |
| | 2141828-1 | A | | | ja / YES | | | Sn | | | | | | | | | | | |
| 1355719-2 | | C | | | ja / YES | | 0.08-0.22 | Au | | E = 1.5 G = 1.5 $D_{Dr}$ = 0.65 | H = 2 K = 2 $D_{Iso}$ = 1.1 | 0.15 | | | | | | | |
| 1355719-1 | | C | | | ja / YES | | | Sn | | | | | | | | | | | |
| | | | | | | | | | | | | | Verarbeitung Spez. APPLICATION SPEC. | zugehoerige Einzeldichtung / SUITABLE SINGLE WIRE SEAL | | | | | |

Bemerkungen

1. Datumscode (woche/Jahr z.B. KW 38/Jahr2009) und TE-Revision (z.B. Rev.A)
   DATE CODE (WEEK/YEAR E.G. WEEK NUMBER 38/YEAR2009) AND TE REVISION (E.G. REV. A)
2. Passend zu Buchsenkontakt siehe Zeichnung 929454
   SUITABLE FOR SOCKET CONTACT SEE DRAWING 929454
3. Einzelheiten der Ausfuehrung bleiben dem Hersteller ueberlassen
   DETAILS OF DESIGN ARE LEFT TO MANUFACTURER
4. Nur fuer FLR-Leitung nach DIN 72551 Teil 6
   FOR FLR-CONDUCTOR ACCORDING TO DIN 72551-6 ONLY

△5 nicht fuer Neuanwendung
NOT FOR NEW APPLICATION

△6 zugverstaerkte Leitung nach LV 112-4
REINFORCED WIRE ACCORDING LV 112-4

7. Bei doppelt fallenden Werkzeugen wird die erste Ueberfeder mit einer Kennzeichnung "–" versehen
   WITH DOUBLE OUT DIES THE FIRST SPRING WILL BE PROVIDED WITH AN INDICATION "–"

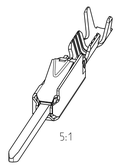


THIS DRAWING IS A CONTROLLED DOCUMENT.

DIMENSIONS: mm

TOLERANCES UNLESS OTHERWISE SPECIFIED: 0 PLC ±; 1 PLC ±; 2 PLC ±; 3 PLC ±; 4 PLC ±; ±0.2; ANGLES ±1°

MATERIAL: - -

FINISH: - -

| | | |
|---|---|---|
| DWN | S.Garcia | 06JAN1999 |
| CHK | R.Jetter | 06JAN1999 |
| APVD | M.Bleicher | 13AUG2003 |

PRODUCT SPEC: 108-18030

APPLICATION SPEC: 114-18021 / -18025

WEIGHT: -

TE Connectivity

NAME: MQS Tabellenzeichnung Stiftkontakt TABLE PIN CONTACT

| SIZE | CAGE CODE | DRAWING NO | RESTRICTED TO |
|---|---|---|---|
| A1 | 00779 | C-929453 | - |

CUSTOMER DRAWING

SCALE 10:1 SHEET 1 OF 1 REV C24

4805 (3/11)