LCD Module Technical Specification

First Edition
Apr. 14, 2010

Final Revision
Oct. 14, 2010

Type No. **T-55467D084J-LW-A-AAN**

Customer :

Customer's Product No :

OPTREX CORPORATION

Approved :	Yasuo Kawasaki QUALITY ASSURANCE DIVISION
Checked :	Toshiaki Ochi Product Realization Div.
Prepared :	Noboru Wada Product Realization Div.

APPROVED

By _____

Signature :

Date :

Please return this specification within two month with your signature.
If not returned within two month ,specification will be considered
as having been accepted.

OPTREX Confidential

CONTENTS

No.	Item	Page
--	CONTENTS	2
1	APPLICATION	3
2	OVERVIEW	4
3	ABSOLUTE MAXIMUM RATINGS	5
4	ELECTRICAL CHARACTERISTICS	5
5	INTERFACE PIN CONNECTION	7
6	INTERFACE TIMING	9
7	BLOCK DIAGRAM	13
8	MECHANICAL SPECIFICATION	14
9	OPTICAL CHARACTERISTICS	16
10	RELIABILITY TEST CONDITION	19
11	INSPECTION STANDARDS	20
12	OTHER FEATURE	21
13	HANDLING PRECAUTIONS FOR TFT-LCD MODULE	22
--	PACKAGING SPECIFICATION	25
--	PRODUCTS NUMBER LABELING FORMS	29
--	LED UNIT for 8.4"VGA	30

Revision History

Rev.	Date	Comment
1	Oct. 14, 2010	Revise: TECHNICAL SPECIFICATION Revise: PACKAGING SPECIFICATION Revise: LED UNIT for 8.4"SVGA

1. APPLICATION

This specification applies to color TFT-LCD module, T-55467D084J-LW-A-AAN.

These specification papers are the proprietary product of OPTREX CORPORATION ("OPTREX) and include materials protected under copyright of OPTREX. No part of this document may be reproduced in any form or by any means without the express written permission of OPTREX.

OPTREX does not assume any liability for infringement of patents, copyrights or other intellectual property rights of third parties by or arising from use of a product specified in this document. No license, express, implied or otherwise, is granted under any patents, copyrights or other intellectual property rights of OPTREX or of others.

OPTREX classifies the usage of the TFT-LCD module as follows. Please confirm the usage before using the product.

(1) Standard Usage

Computers, office equipment, factory automation equipment, test and measurement equipment, communications, transportation equipment(automobiles, ships, trains, etc.), provided, however, that operation is not influenced by TFT-LCD directly.

(2) Special Usage

Medical equipment, safety equipment, transportation equipment, provided, however, that TFT-LCD is necessary to its operation.

(3) Specific Usage

Cockpit Equipment, military systems, aerospace equipment, nuclear reactor control systems, life support systems and any other equipment. OPTREX should make a contract that stipulate apportionment of responsibilities between OPTREX and our customer.

The product specified in this document is designed for "Standard Usage" unless otherwise specified in this document. If customers intend to use the product for applications other than those specified for "Standard Usage", they should first contact OPTREX sales representative for it's intended use in writing.

OPTREX has been making continuous effort to improve the reliability of its products. Customers should implement sufficient reliability design of their application equipments such as redundant system design, fail-safe functions, anti-failure features.

OPTREX assumes no responsibility for any damage resulting from the use of the product that does not comply with the instructions and the precautions specified in this document.

Please contact and consult OPTREX sales representative for any questions regarding this product.

2. OVERVIEW

T-55467D084J-LW-A-AAN is 8.4" color TFT-LCD (Thin Film Transistor Liquid Crystal Display) module composed of LCD panel, driver ICs, control circuit, and backlight unit.

By applying 6 bit digital data, 640 × 480, 262k-color images are displayed on the 8.4" diagonal screen. Input power voltage is 3.3 V for LCD driving.
The type of data and control signals are digital and transmitted via CMOS interface per Typ. 25 MHz clock cycle.

Driver circuit for LED backlight is not included in this module. General specifications are summarized in the following table:

ITEM	SPECIFICATION
Display Area (mm)	170.9(H) × 128.2 (V) (8.4-inch diagonal)
Number of Dots	640 × 3 (H) × 480 (V)
Pixel Pitch (mm)	0.267 (H) × 0.267 (V)
Color Pixel Arrangement	RGB vertical stripe
Display Mode	Normally white
Number of Color	262k
Luminance (cd/m^2)	800
Viewing Angle (CR ≥ 10)	–80~80°(H), –60~80°(V)
Surface Treatment	Anti-glare and hard-coating 3H
Electrical Interface	CMOS
Viewing Direction	Higher Contrast ratio: 6 o'clock Less gray scale reversal: 12 o'clock
Module Size (mm)	199.5 (W) × 149.0 (H) × 11.5 (D)
Module Mass (g)	365
Backlight Unit	LED, edge-light, replaceable

Characteristic value without any note is typical value.

3. ABSOLUTE MAXIMUM RATINGS

ITEM		SYMBOL	MIN.	MAX.	UNIT
Power Supply Voltage for LCD		VCC	–0.3	4.0	V
Logic Input Voltage		VI	–0.3	6.0	V
Backlight (LED) Current		IF	0	180	mA
Operation Temperature (Panel)	Note 1,2)	$T_{op(Panel)}$	–30	80	°C
Operation Temperature (Ambient)	Note 2)	$T_{op(Ambient)}$	–30	80	°C
Storage Temperature	Note 2)	T_{stg}	–30	80	°C

[Note]

1) Measured at the center of active area and at the center of panel back surface

2) Top,Tstg ≤ 40°C : 90%RH max. without condensation

Top,Tstg > 40°C : Absolute humidity shall be less than the value of 90%RH at 40°C without condensation.

4. ELECTRICAL CHARACTERISTICS

(1) TFT- LCD

Ambient Temperature: Ta = 25°C

ITEM		SYMBOL	MIN.	TYP.	MAX.	UNIT	Remarks
Power Supply Voltage for LCD		VCC	3.0	3.3	3.6	V	*1)
Power Supply Current for LCD		ICC	--	320	500	mA	*2)
Permissive Input Ripple Voltage		VRP	--	--	100	mVp-p	VCC = +3.3V
Logic Input Voltage	High	VIH	2.0	--	5.5	V	
	Low	VIL	0	--	0.8	V	

*1) Power and signals sequence:

t1 ≤ 10 ms　　200 ms ≤ t4

0 < t2 ≤ 50 ms　　200 ms ≤ t5

0 < t3 ≤ 50 ms　　0 ≤ t6

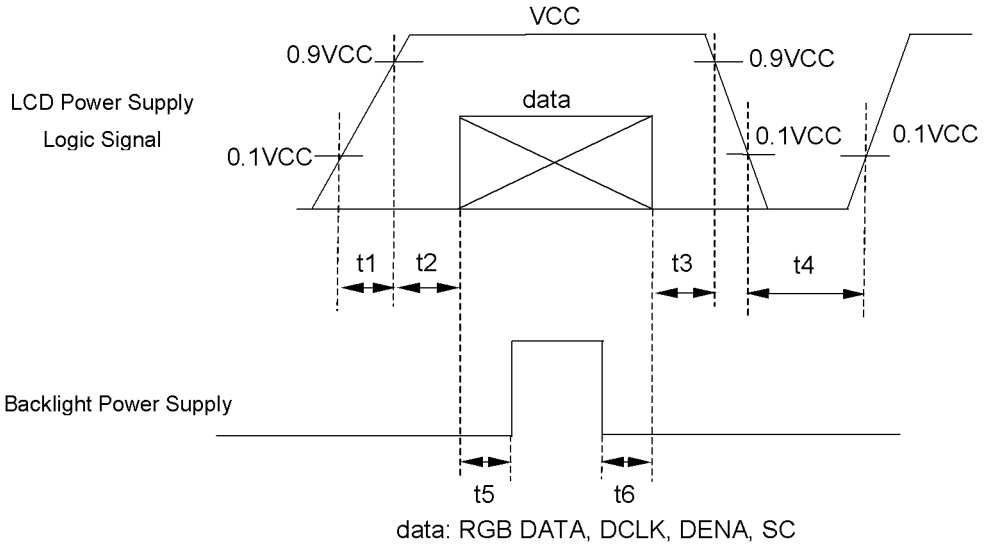

VCC-dip conditions:

1) When 2.4 V ≤ VCC < 3.0 V, td ≤ 10 ms

2) When VCC < 2.4 V

VCC-dip conditions should also follow the power and signals sequence.

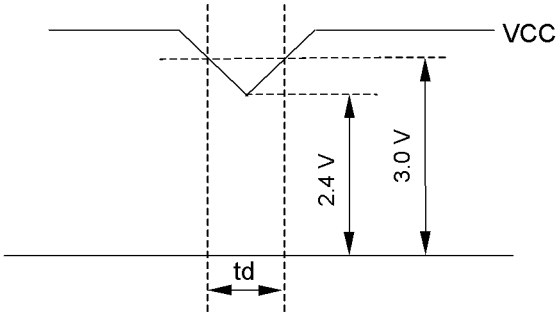

*2) VCC = + 3.3 V, f_H=31.5kHz, f_V=60Hz, f_{CLK}= 25MHz
Display image at typical power supply current value is 64-gray-bar pattern (6 bit), 480 line mode.

*3) Fuse

Parameter	Fuse Type Name	Supplier	Remark
VCC	FCC16162AB	Kamaya Electric Co., Ltd.	*)

*) The power supply capacity should be designed to be more than the fusing current.

(2) Backlight

ITEM	SYMBOL	MIN.	TYP.	MAX.	UNIT	Remarks
LED Voltage	VF	--	(30)	36.6	V	IF = 60 mA, Ta = 25°C, *2)
		--	--	37.9	V	IF = 60 mA, Ta = 0°C
		--	--	39.6	V	IF = 60 mA, Ta = –30°C
LED Current	IF	--	60	70	mA	Ta = 25°C, *1), *3)
LED Life Time	LT	80,000	100,000	--	h	IF = 60 mA, Ta = 25°C *4), *5), Continuous operation

[Note]

*1) Constant Current Drive

*2) The Voltage deviation between strings: $|V_{f1} - V_{f2}| \leq 2$ V

*3) LED Current measurement method

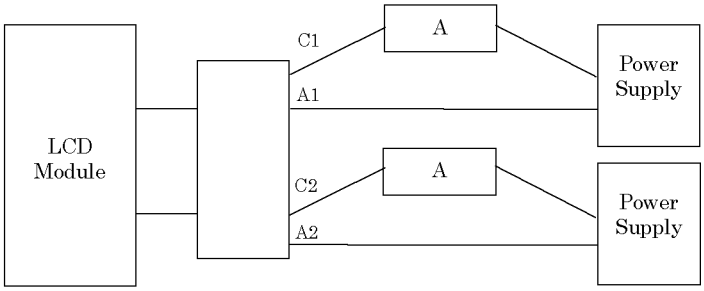

*4) LED life time is defined as the time when the brightness becomes 50% of the initial value.

*5) The life time of the backlight depends on the ambient temperature. The life time will decrease under high temperature.

5. INTERFACE PIN CONNECTION

(1) CN 1(Interface Signal)

Used connector: DF9BA-31P-1V(32) (HIROSE)

Corresponding connector: DF9B-31S-1V (HIROSE)

Pin No.	Symbol	Function
1	GND	
2	DCLK	Clock signal for sampling catch data signal
3	HD	Horizontal sync signal *1)
4	VD	Vertical sync signal *1)
5	GND	
6	R0	Red data signal(LSB)
7	R1	Red data signal
8	R2	Red data signal
9	R3	Red data signal
10	R4	Red data signal
11	R5	Red data signal(MSB)
12	GND	
13	G0	Green data signal(LSB)
14	G1	Green data signal
15	G2	Green data signal
16	G3	Green data signal
17	G4	Green data signal
18	G5	Green data signal(MSB)
19	GND	
20	B0	Blue data signal(LSB)
21	B1	Blue data signal
22	B2	Blue data signal
23	B3	Blue data signal
24	B4	Blue data signal
25	B5	Blue data signal(MSB)
26	GND	
27	DENA	Data enable signal (to settle the viewing area)
28	VCC	3.3 V Power Supply
29	VCC	3.3 V Power Supply
30	NC	This pin should be open.
31	SC	Scan direction control. Low = Normal, High = Reverse

*1) HD and VD are not being used for timing control.

*2) Metal frame is connected to signal GND.

OPTREX Confidential

(2) CN 2(Backlight)

Backlight-side connector: SM06B-SHLS-TF(LF)(SN) (JST)

Corresponding connector: SHLP-06V-S-B (JST)

Pin No.	Symbol	Function
1	NC	This pin should be open.
2	NC	This pin should be open.
3	LED C 1	LED cathode 1
4	LED A 1	LED anode 1
5	LED A 2	LED anode 2
6	LED C 2	LED cathode 2

6. INTERFACE TIMING

(1) Timing Specifications

ITEM			SYMBOL	MIN.	TYP.	MAX.	UNIT
DCLK	Frequency		f_{CLK}	20	25	30	MHz
	Period		t_{CLK}	33.3	40	50	ns
	Low Width		t_{WCL}	10	--	--	ns
	High Width		t_{WCH}	10	--	--	ns
DATA(R,G,B) DENA	Set up time		t_{DS}	4	--	--	ns
	Hold time		t_{DH}	4	--	--	ns
DENA	Horizontal	Active Time	t_{HA}	640	640	640	t_{CLK}
		Blanking Time	t_{HB}	20	160	--	t_{CLK}
		Frequency	f_H	27	31.5	38	kHz
		Period	t_H	26.3	31.7	37.0	μs
	Vertical	Active Time	t_{VA}	480	480	480	t_H
		Blanking Time	t_{VB}	4	45	--	t_H
		Frequency	f_V	55	60	70	Hz
		Period	t_V	14.3	16.7	18.2	ms

[Note]

1) DATA is latched at fall edge of DCLK in this specification.
2) DENA (Data Enable) should always be positive polarity as shown in the timing specification.
3) DCLK should appear during all invalid period.
4) In case of blanking time fluctuation, please satisfy following condition.

$t_{VBn} > t_{VBn-1} - 3(t_H)$

OPTREX Confidential

(2) Timing Chart

a. Pixel Timing Chart

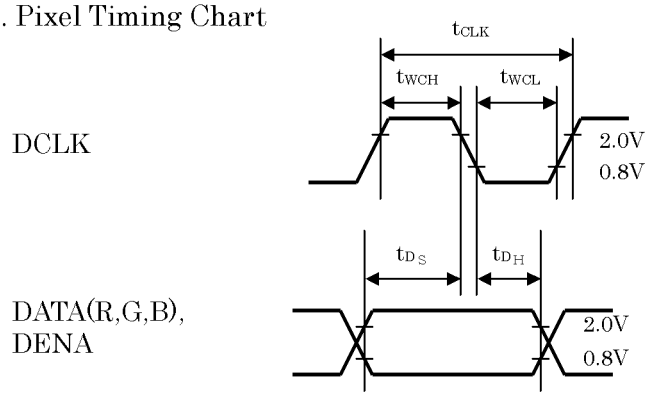

b. Horizontal Timing Chart

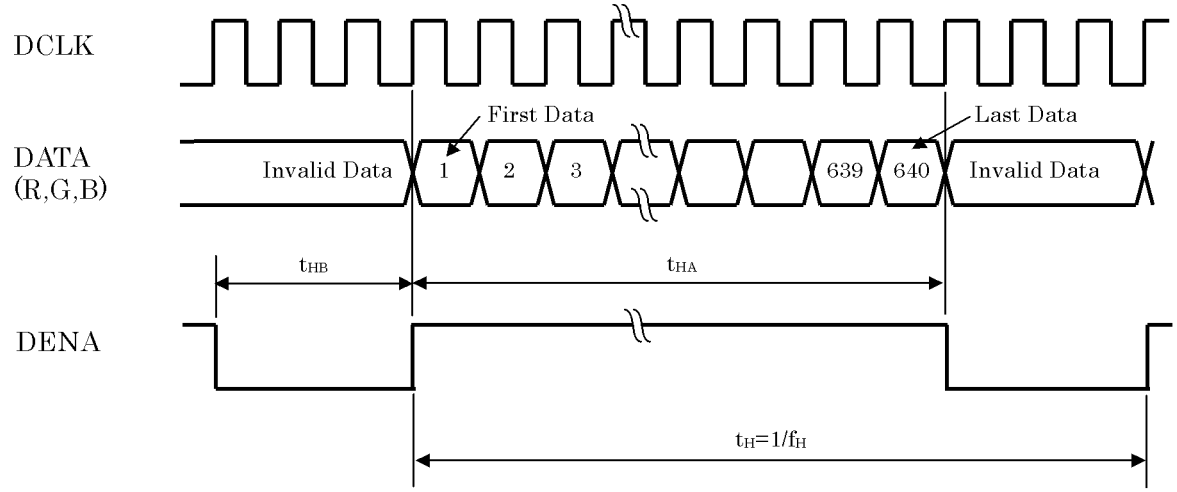

c. Vertical Timing Chart

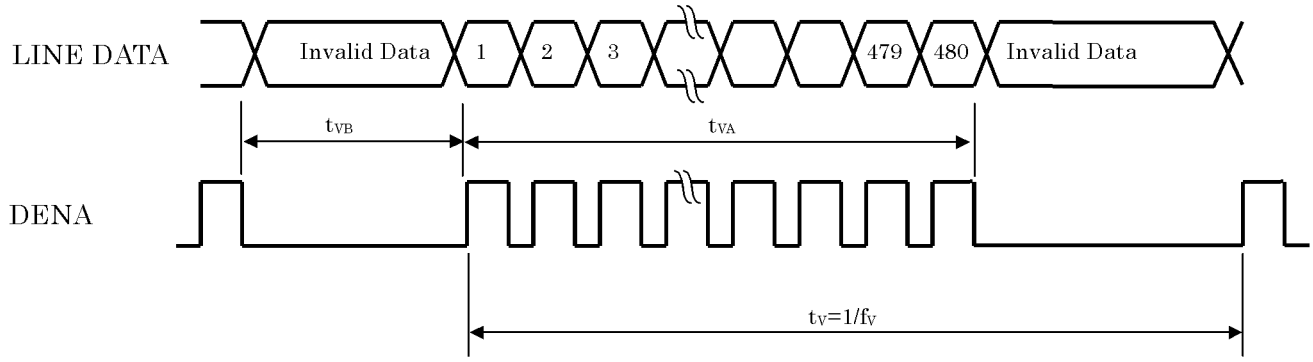

(3) Color Data Assignment

COLOR		INPUT DATA																	
		R DATA						G DATA						B DATA					
		R5	R4	R3	R2	R1	R0	G5	G4	G3	G2	G1	G0	B5	B4	B3	B2	B1	B0
		MSB					LSB	MSB					LSB	MSB					LSB
BASIC COLOR	BLACK	0	0	0	0	0	0	0	0	0	0	0	0	0	0	0	0	0	0
	RED(63)	1	1	1	1	1	1	0	0	0	0	0	0	0	0	0	0	0	0
	GREEN(63)	0	0	0	0	0	0	1	1	1	1	1	1	0	0	0	0	0	0
	BLUE(63)	0	0	0	0	0	0	0	0	0	0	0	0	1	1	1	1	1	1
	CYAN	0	0	0	0	0	0	1	1	1	1	1	1	1	1	1	1	1	1
	MAGENTA	1	1	1	1	1	1	0	0	0	0	0	0	1	1	1	1	1	1
	YELLOW	1	1	1	1	1	1	1	1	1	1	1	1	0	0	0	0	0	0
	WHITE	1	1	1	1	1	1	1	1	1	1	1	1	1	1	1	1	1	1
RED	RED(1)	0	0	0	0	0	1	0	0	0	0	0	0	0	0	0	0	0	0
	RED(2)	0	0	0	0	1	0	0	0	0	0	0	0	0	0	0	0	0	0
	RED(62)	1	1	1	1	1	0	0	0	0	0	0	0	0	0	0	0	0	0
	RED(63)	1	1	1	1	1	1	0	0	0	0	0	0	0	0	0	0	0	0
GREEN	GREEN(1)	0	0	0	0	0	0	0	0	0	0	0	1	0	0	0	0	0	0
	GREEN(2)	0	0	0	0	0	0	0	0	0	0	1	0	0	0	0	0	0	0
	GREEN(62)	0	0	0	0	0	0	1	1	1	1	1	0	0	0	0	0	0	0
	GREEN(63)	0	0	0	0	0	0	1	1	1	1	1	1	0	0	0	0	0	0
BLUE	BLUE(1)	0	0	0	0	0	0	0	0	0	0	0	0	0	0	0	0	0	1
	BLUE(2)	0	0	0	0	0	0	0	0	0	0	0	0	0	0	0	0	1	0
	BLUE(62)	0	0	0	0	0	0	0	0	0	0	0	0	1	1	1	1	1	0
	BLUE(63)	0	0	0	0	0	0	0	0	0	0	0	0	1	1	1	1	1	1

[Note]

1) Definition of gray scale

Color (n) ---n indicates gray scale level.

Higher n means brighter level.

2) Data

1:High, 0: Low

OPTREX Confidential

(4) Display Position and Scan Direction

D(X,Y) shows the data number of input signal.

SC: Low

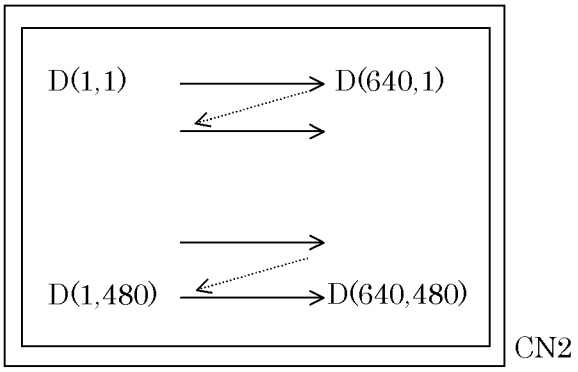

SC: High

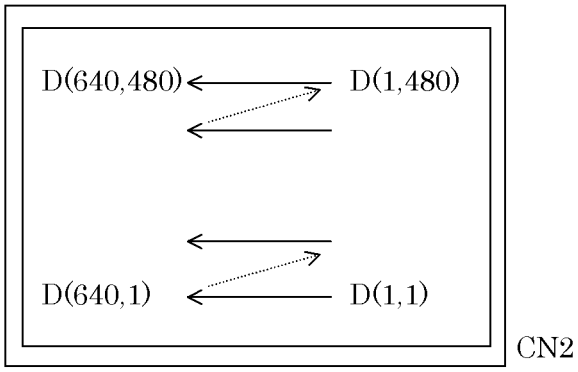

7. BLOCK DIAGRAM

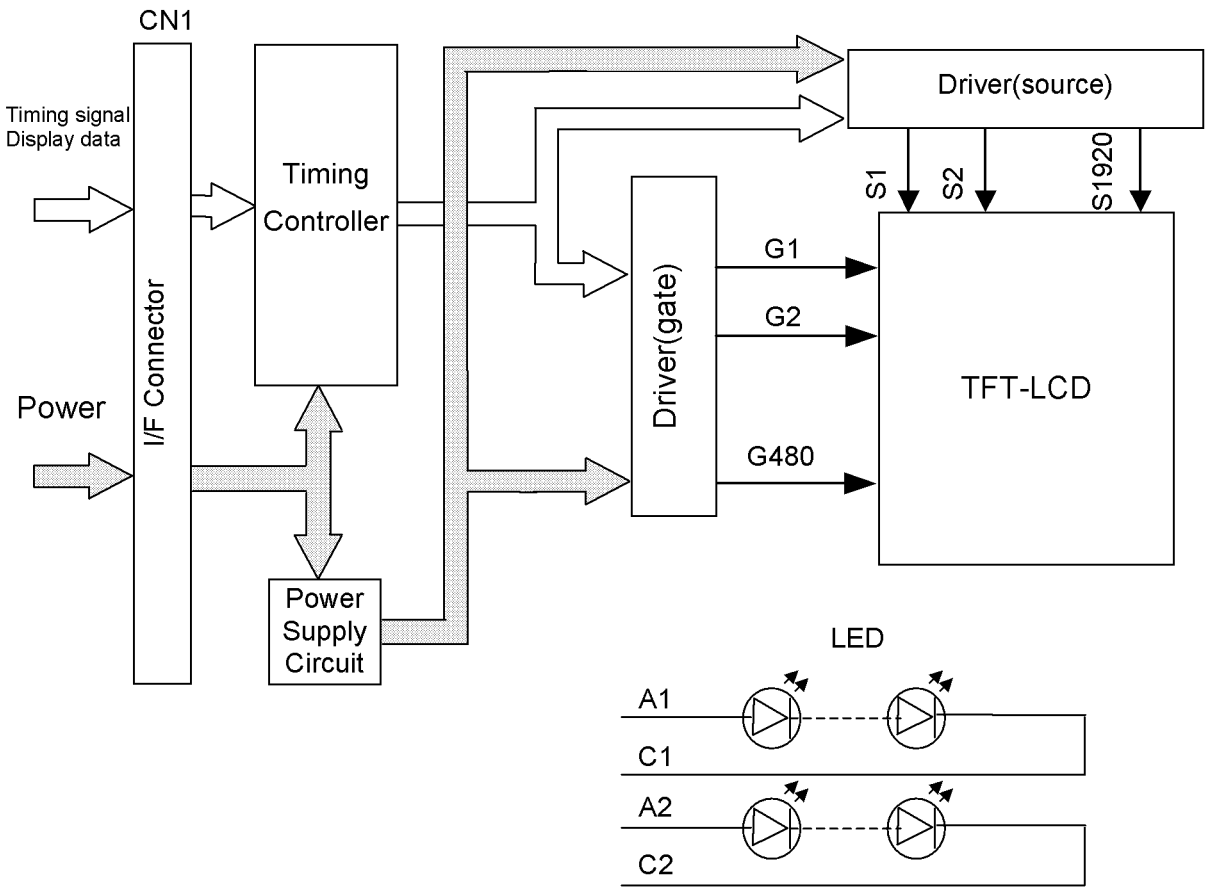

8. MECHANICAL SPECIFICATIONS

(1) Front Side

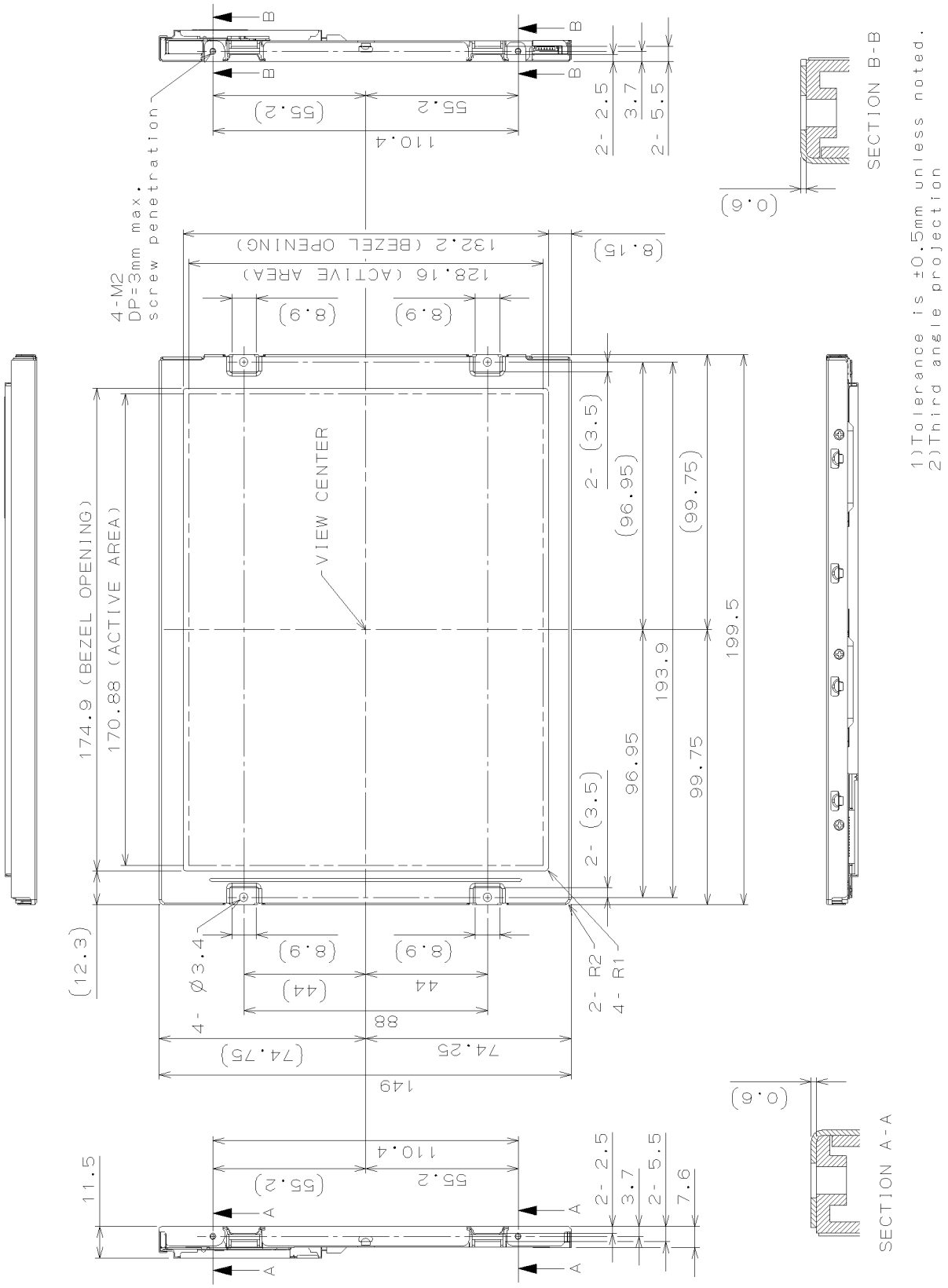

(Unit: mm)

(2) Rear Side

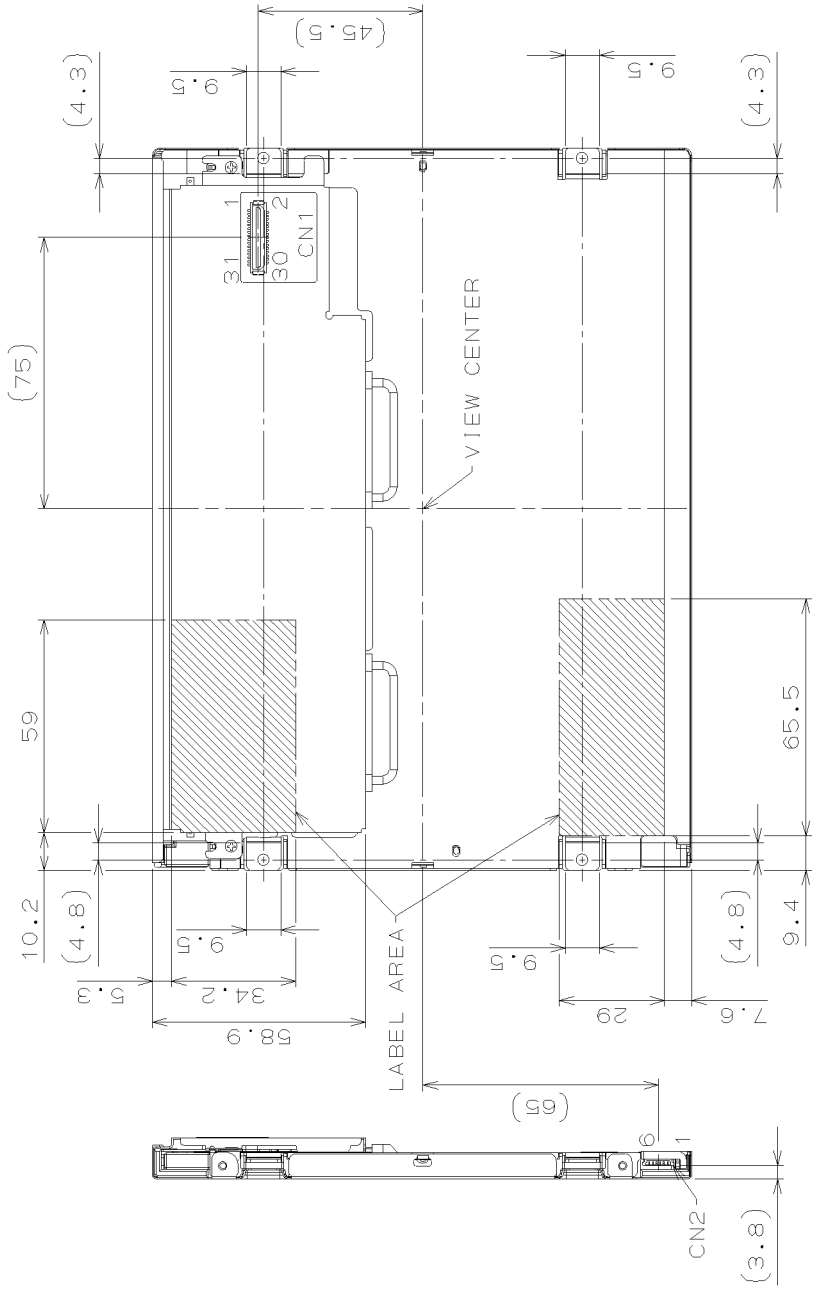

1)Tolerance is ±0.5mm unless noted.
2)Third angle projection

CN1:DF9BA-31P-1V(32) (HIROSE)
CN2:SM06B-SHLS-TF(LF)(SN) (JST)

(Unit: mm)

9. OPTICAL CHARACTERISTICS

Ta=25°C, VCC=3.3V, Input Signals: Typ. values shown in Section 6

ITEM		SYMBOL	CONDITION	MIN.	TYP.	MAX.	UNIT	Remarks
Contrast Ratio		CR	θ_V=0°, θ_H=0°	390	600	--	--	*1)*2)*5)
Luminance		Lw	θ_V=0°, θ_H=0°	640	800	--	cd/m^2	*1)*5)
Luminance Uniformity		ΔLw	θ_V=0°, θ_H=0°	--	--	30	%	*1)*3)*5)
Response Time		tr	θ_V=0°, θ_H=0°	--	4	--	ms	*1)*4)*5)
		tf	θ_V=0°, θ_H=0°	--	12	--	ms	*1)*4)*5)
Viewing Angle	Horizontal	θ_H	CR ≥ 10	–65~65	–80~80	--	°	*1)*5)
	Vertical	θ_V		–45~65	–60~80	--	°	*1)*5)
Image Sticking		tis	2 h	--	--	2	s	*6)
Color Coordinates	Red	Rx	θ_V=0°, θ_H=0°	0.495	0.535	0.575	--	*1)*5)
		Ry		0.288	0.328	0.368		
	Green	Gx		0.303	0.343	0.383		
		Gy		0.499	0.539	0.579		
	Blue	Bx		0.118	0.158	0.198		
		By		0.081	0.121	0.161		
	White	Wx		0.273	0.313	0.353		
		Wy		0.289	0.329	0.369		

[Note]

These items are measured using EZContrast (ELDIM) for viewing angle and CS2000 (Minolta) or equivalent equipment for others under the dark room condition (no ambient light) after more than 30 minutes from turning on the backlight unless noted.

Condition: IF=60 mA

Measurement method for luminance and color coordinates is as follows.

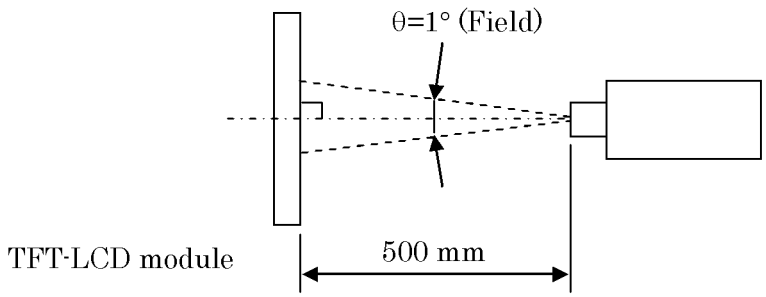

The luminance is measured according to FLAT PANEL DISPLAY MEASUREMENTS STANDARD (VESA Standard).

*1) Measurement Point

Contrast Ratio, Luminance, Response Time, Viewing Angle, Color Coordinates: Display Center

Luminance Uniformity: point 1~5 shown in a figure below

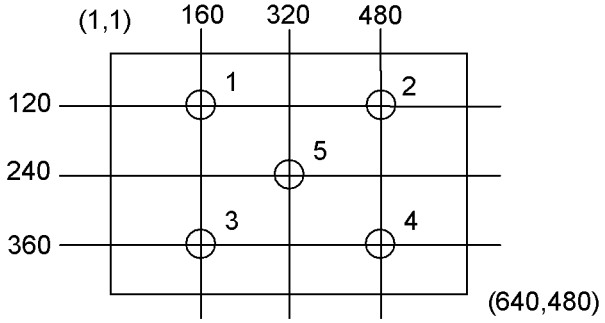

*2) Definition of Contrast Ratio

CR=Luminance with all white pixels / Luminance with all black pixels

*3) Definition of Luminance Uniformity

$\Delta Lw=[Lw(MAX)/Lw(MIN)-1] \times 100$

*4) Definition of Response Time

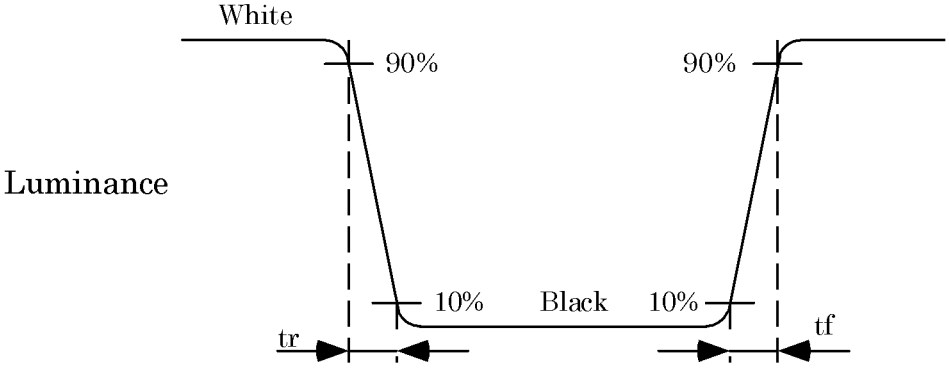

*5) Definition of Viewing Angle (θ_V, θ_H)

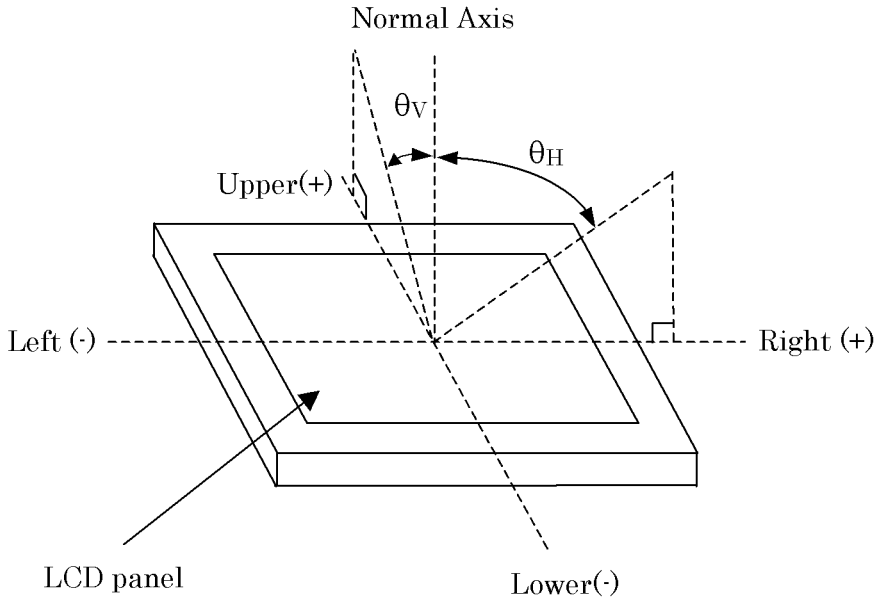

*6) Image Sticking

Continuously display the test pattern shown in the figure below for two-hours. Then display a completely white screen. The previous image shall not persist more than two seconds at 25°C.

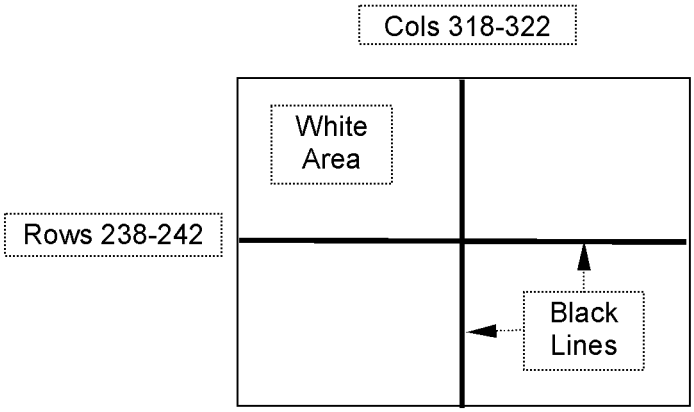

TEST PATTERN FOR IMAGE STICKING TEST

10. RELIABILITY TEST CONDITION

(1) Temperature and Humidity

TEST ITEM	CONDITIONS
HIGH TEMPERATURE HIGH HUMIDITY OPERATION	40°C, 90%RH, 240 h (No condensation)
HIGH TEMPERATURE OPERATION	80°C, 240 h
LOW TEMPERATURE OPERATION	–30°C, 240 h
HIGH TEMPERATURE STORAGE	80°C, 240 h
LOW TEMPERATURE STORAGE	–30°C, 240 h
THERMAL SHOCK (NON-OPERATION)	–30°C (1h) ~ 80°C(1h), 100 cycles

(2) Shock & Vibration

ITEM	CONDITIONS
SHOCK (NON-OPERATION)	Shock level: 1470 m/s^2 (150G) Waveform: half sinusoidal wave, 2 ms Number of shocks: one shock input in each direction of three mutually perpendicular axis for a total of six shock inputs
VIBRATION (NON-OPERATION)	Vibration level: 9.8 m/s^2 (1.0G)(Zero to Peak) Waveform: sinusoidal Frequency range: 5 to 500 Hz Frequency sweep rate: 0.5 octave /min Duration: one sweep from 5 to 500 Hz in each of three mutually perpendicular axis(each x,y,z axis: 1 hour, total 3 hours)

(3) ESD Test

ITEM	CONDITIONS
CONTACT DISCHARGE (OPERATION)	150pF, 330Ω, ±8kV, 10 times at 1 sec interval
SIGNAL PIN DISCHARGE (NON-OPERATION)	200pF, 0Ω, ±200V, 10 times at 1 sec interval

(4) Judgment standard

The judgment of the above tests should be made as follow:

Pass: Normal display image, no damage of the display function. (ex. no line defect)
Partial transformation of the module parts should be ignored.

Fail: No display image, damage of the display function. (ex. line defect)

OPTREX Confidential

12. OTHER FEATURE

This LCD module complies with RoHS*) directive.

*) RoHS: Restriction of the use of certain hazardous substances in electrical and electronic equipment

UL1950 certified (UL File# E158720)

13. HANDLING PRECAUTIONS FOR TFT-LCD MODULE

Please pay attention to the followings in handling TFT-LCD products;

(1) ASSEMBLY PRECAUTION

a. Please mount the LCD module by using mounting hole with a screw clamping torque (recommended value: 0.5 Nm for mounting tab on front, 0.2 Nm for mounting screw hole on LCD sides). Please do not bend or wrench the LCD module in assembling. Please do not drop, bend or twist the LCD module in handling.

b. Please design display housing in accordance with the following guide lines.

(a) Housing case must be designed carefully so as not to put stresses on LCD and not to wrench module.

(b) Under high temperature environment, performance and life time of LED may heavily shorten. When you design with our LCD product, please consider radiating heat and ventilation for good heat management.

(c) Keep sufficient clearance between LCD module back surface and housing when the LCD module is mounted. Approximately 1.0mm of the clearance in the design is recommended taking into account the tolerance of LCD module thickness and mounting structure height on the housing.

(d) When some parts, such as, FPC cable and ferrite plate, are installed underneath the LCD module, still sufficient clearance is required, such as 0.5mm. This clearance is, especially, to be reconsidered when the additional parts are implemented for EMI countermeasure.

(e) Design the LED driver location and connector position carefully so as not to give stress to LED backlight cable.

(f) Keep sufficient clearance between LCD module and the others parts, such as inverter and speaker so as not to interfere the LCD module. Approximately 1.0 mm of the clearance in the design is recommended.

(g) To avoid local elevation/decrease of temperature, considering location of heating element, heat release, thermal design should be done.

c. Please do not push or scratch LCD panel surface with anything hard. And do not soil LCD panel surface by touching with bare hands. (Polarizer film, surface of LCD panel is easy to be flawed.)

d. Please wipe off LCD panel surface with absorbent cotton or soft cloth in case of it being soiled.

e. Please wipe off drops of adhesives like saliva and water on LCD panel surface immediately. They might damage to cause panel surface variation and color change.

f. Please do not take a LCD module to pieces and reconstruct it. Resolving and reconstructing modules may cause them not to work well.

g. Please do not touch metal frames with bare hands and soiled gloves. A color change of the metal frames can happen during a long preservation of soiled LCD modules.
h. Please handle metal frame carefully because edge of metal frame is very sharp.
i. Please connect the metal frame of LCD module to GND in order to minimize the effect of external noise and EMI.
j. Be sure to connect the cables and the connecters correctly.

(2) OPERATING PRECAUTIONS

a. Please be sure to turn off the power supply before connecting and disconnecting signal input cable.
b. Please do not change variable resistance settings in LCD module. They are adjusted to the most suitable value. If they are changed, it might happen LCD does not satisfy the characteristics specification.
c. The interface signal speed is very high. Please pay attention to transmission line design and other high speed signal precautions to satisfy signal specification.
d. Condensation might happen on the surface and inside of LCD module in case of sudden change of ambient temperature. Please take care so as not to cause any damage mentioned on (1)-d.
e. Please pay attention not to display the same pattern for very long time. Image sticking might happen on LCD. Although image sticking may disappear as the operation time proceeds, screen saver function is recommended not to cause image sticking.
f. Please obey the same safe instructions as ones being prepared for ordinary electronic products.

(3) PRECAUTIONS WITH ELECTROSTATICS

a. This LCD module use CMOS-IC on circuit board and TFT-LCD panel, and so it is easy to be affected by electrostatics. Please be careful with electrostatics by the way of your body connecting to the ground and so on.
b. Please remove protection film very slowly from the surface of LCD module to prevent from electrostatics occurrence.

(4) STORAGE PRECAUTIONS

LCD should be stored in the room temperature environment with normal humidity. The LCD inventory should be processed by first-in first-out method.

(5) SAFETY PRECAUTIONS

a. When you waste damaged or unnecessary LCDs, it is recommended to crush LCDs into pieces and wash them off with solvents such as acetone and ethanol, which should later be burned.
b. If any liquid leaks out of a damaged glass cell and comes in contact with the hands, wash off thoroughly with soap and water.
c. Be sure to turn off the power supply when inserting or disconnecting the LED backlight cable.
d. LED driver should be designed carefully to limit or stop its function when over current is detected on the LED.

(6) OTHERS

a. A strong incident light into LCD panel may cause deterioration to polarizer film, color filter, and other materials, which will degrade the quality of display characteristics. Please do not expose LCD module under strong Ultraviolet rays for a long time.
b. Please pay attention to a panel side of LCD module not to contact with other materials in preserving it alone.
c. For the packaging box handling, please see and obey with the packaging specification datasheet.
d. Please do not reuse the LED unit which is once removed.